CO-PO Presentation

EEE4701, Control system I

Mohammad Jalal Uddin
Assistant Professor, Department of EEE, IIUC
jalal@iiuc.ac.bd, 01911243431

Autumn 2021, Chittagong

Lecture Outcomes

At the end of the lecture, you will learn

a. About course outcomes of EEE4701
b. Contents of the syllabus
c. Evaluation method of the course
d. Reference of the course

Lecture Outcomes

Lecture Outcomes

Lecture Outcomes

Course goals, course outcomes (COs)

CO1 Understand about **basic control system** engineering to model, analysis and design of a system

CO2 Demonstrate basic proficiency in **solving basic electrical and mechanical control system modeling**

CO3 **Design of basic controller** for application specific troubleshooting, identifying problem and providing solution for the sustainable development of the society.

	PO1	PO2	PO3
CO1	√		
CO2		√	
CO3			√

PO1 Engineering Knowledge

PO2 Problem analysis

PO3 Design/development of solutions

Course contents, Details

CO1 CO2 **Linear System Models:** Introduction to control systems, Design process of feedback control system, Mathematical Models of Systems: transfer function and state-space models, conversion between transfer function and state-space models, Linearization.

CO1 CO2 **Block Diagrams and Signal Flow Graphs:** Block diagrams of systems **block diagram reduction**, **signal flow graphs** of systems, **Mason's formula**, Signal flow graphs of state equations. Effect of adding poles and zeros

CO1 CO2 **Stability:** Bounded-input bounded-output (BIBO) stability, **Routh-Hurwitz stability criterion**, Stability in State Space

CO2 CO3 **Time Response:** Pole-zero plots, **first and second order transient responses**, higher order system approximation, Laplace transform and time domain solution of State equations.

CO3 **Steady-state Error:** **Steady-state Error for feedback systems**, System Type, Sensitivity, and Steady-stat error for Systems in State Space.

CO3 **Root Locus Analysis and Design:** Definition of root locus, Properties of root locus, **sketching of root locus plots**. Effect of open-loop zeros and poles. Root locus design concepts the root locus method, rules for root locus plotting and construction of root locus, root locus design.

CO3 **Dynamic Compensation:** Feedback compensation, lead-lag compensation.

CO3 **Frequency Response Analysis and Design**: Frequency response, polar plots, Bode plots and Nyquist diagrams, stability criterion, gain and phase margins, compensator design in the frequency domain, Digital Control System.

Evaluation methods

- Attendance 10
- Class tests 10 CO1 CO2 and/or CO3
- Assignment/Quiz CO1 or CO2 or CO3
- Midterm examination 30 (21+9) CO1 and CO2
- Final Examination 50 (30+20) CO1 CO2 CO3

<60%	0
<65	4
<70	5
<75	6
<80	7
<85	8
<90	9
>90	10

Welcome again

- Reference
- Control System Basic
- System Configurations
- Analysis and Design Objectives
- Design Process
- Test Inputs

Welcome again

- Course Code: EEE4701 Course Title: Control System I
- Contact Hours: 3/Week

- Reference
  - Norman S. Nise, ***Control System Engineering***, 7th Ed., Wiley, 2015.
  - Katsuhiko Ogata, ***Modern Control Engineering***, 5th Ed., Prentice Hall, 2010.
  - Stuart A. Boyer, ***SCADA: supervisory control and data acquisition, International Society of Automation***, 2009.

Control System Concepts

- The rocket fire
- In splashing cooling water
- Robot
- Self guided vehicles
- Autonomous Vehicle

- Pancreas: control blood sugar

Control System Definition

Don't Forget!
Desired Output
Desired Performance

FIGURE 1.1 Simplified description of a control system

A control system consists of subsystems and processes (or plants) assembled for the purpose of obtaining a **desired output** with **desired performance**, given a specified input. Figure 1.1 shows a control system in its simplest form, where the input represents a desired output.

Control System Definition

System Performance!
Transient Response
Steady-State Error

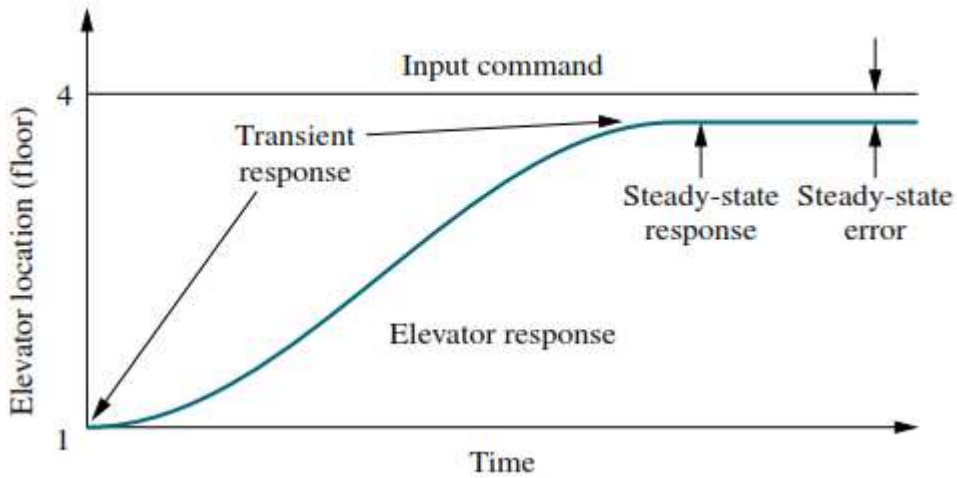

FIGURE 1.2 Elevator response

Two major measures of performance are apparent: (1) the transient response and (2) the steady-state error.
In our example, passenger comfort and passenger patience are dependent upon the transient response. If this response is too fast, passenger comfort is sacrificed; if too slow, passenger patience is sacrificed. The steady-state error is another important performance specification since passenger safety and convenience would be sacrificed if the elevator did not properly level.

Control System Why

We build control systems for four primary reasons:

1. Power amplification
2. Remote control
3. Convenience of input form
4. Compensation for disturbances

Control System History & Applications

1. Liquid level control
2. Steam pressure and temperature controls
3. Speed control
4. Stability, stabilization, and steering

Simple Complex Complicated

Linear Non-linear

Control System System Configurations

Does Controller have the information about the present system output?

1. Open Loop System — ***NO***
2. Closed Loop System — ***YES***

Control System System Configurations

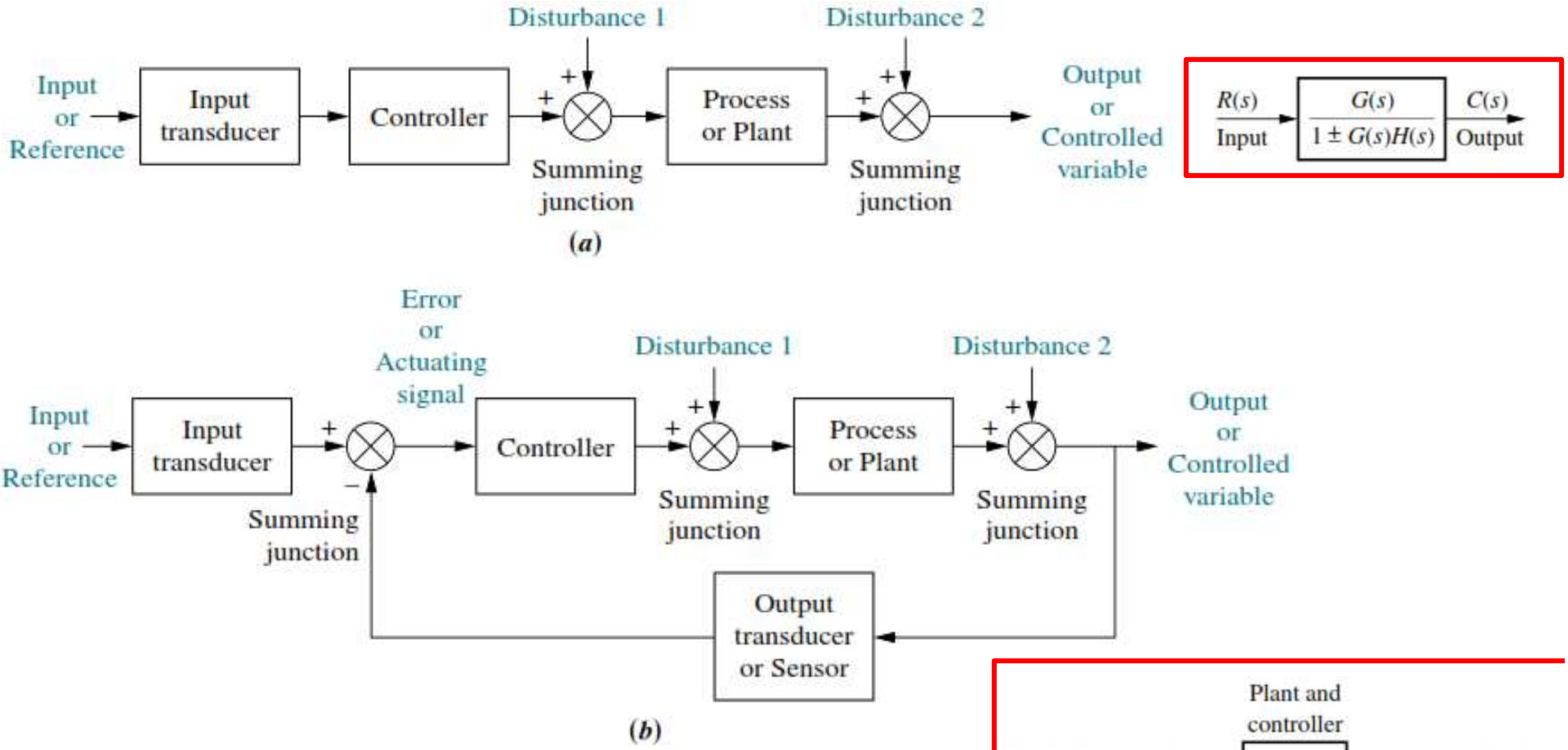

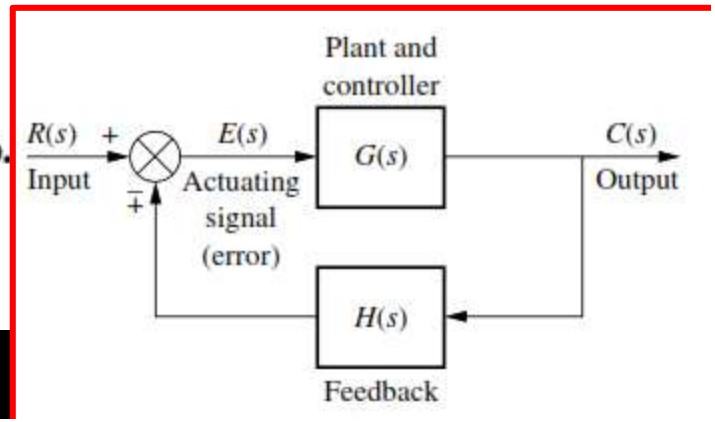

FIGURE 1.6 Block diagrams of control systems: **a.** open-loop system; **b.**

Control System System Configurations

Advantages/Disadvantages/Comparison

1. Compensating Disturbances
2. Accuracy
3. Sensitivity
4. Complexity
5. Expenses
6. Performance Controlled in convenient and flexible way

Analysis and Design Objectives

- Analysis is the process by which a system's performance is determined. For example, we evaluate its transient response and steady-state error to determine if they meet the desired specifications.
- Design is the process by which a system's performance is created or changed. For example, if a system's transient response and steady-state error are analyzed and found not to meet the specifications, then we change parameters or add additional components to meet the specifications.

Analysis and Design Objectives

- A control system is dynamic: It responds to an input by undergoing a transient response before reaching a steady-state response that generally resembles the input.
- We have already identified these two responses and cited a position control system (an elevator) as an example.
- In this section, we discuss three major objectives of systems analysis and design:
    1. **producing** the desired transient response,
    2. **reducing** steady-state error, and
    3. **achieving** stability.
- We also address some other design concerns, such as cost and the sensitivity of system performance to changes in parameters.

Design Process

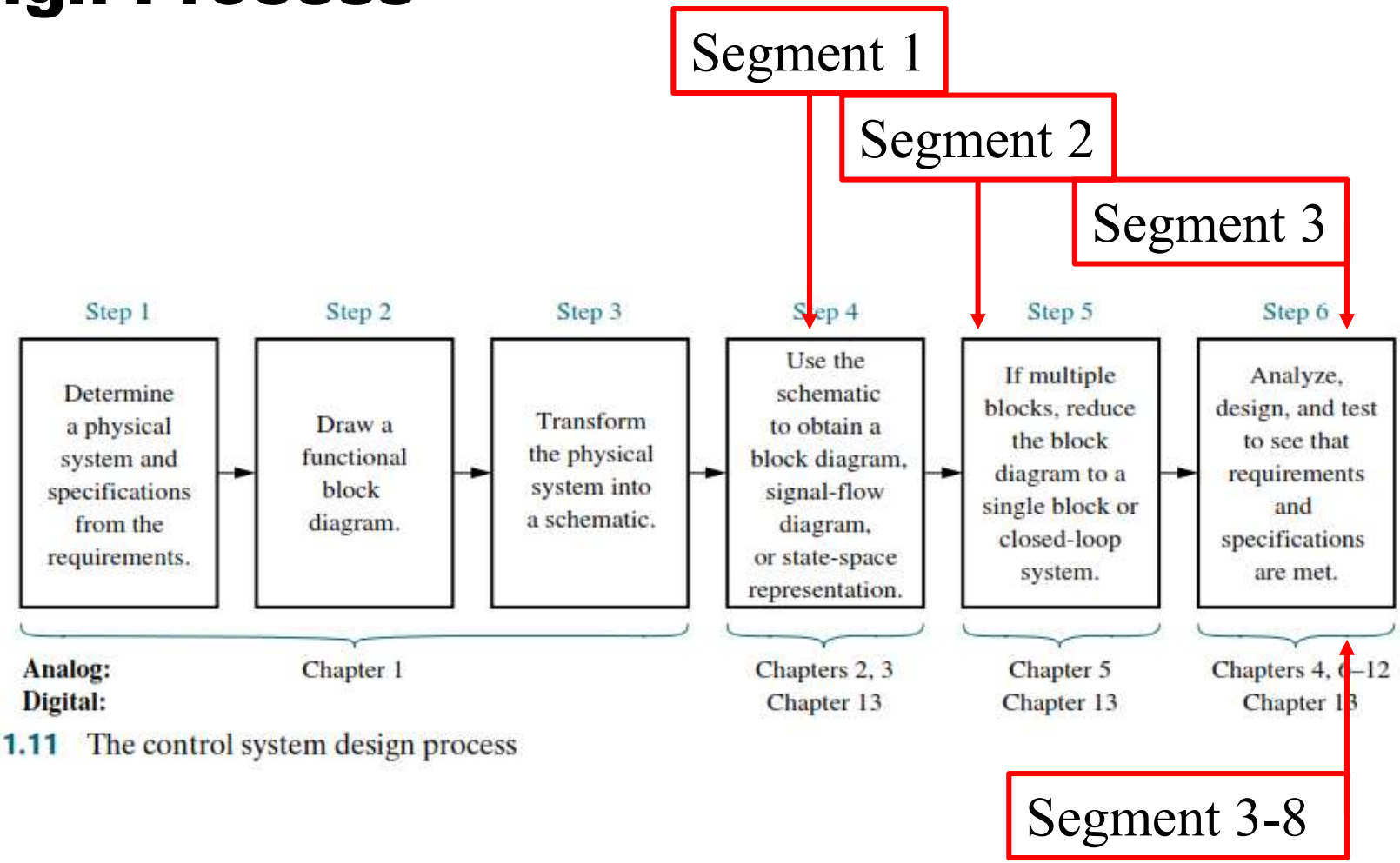

FIGURE 1.11 The control system design process

Control system Standard/Test Inputs

TABLE 1.1 Test waveforms used in control systems

Input	Function	Description	Sketch	Use
Impulse	$\delta(t)$	$\delta(t) = \infty$ for $0- < t < 0+$ $= 0$ elsewhere $\int_{0-}^{0+} \delta(t)dt = 1$	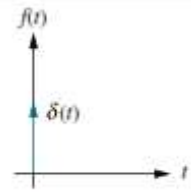	Transient response Modeling
Step	$u(t)$	$u(t) = 1$ for $t > 0$ $= 0$ for $t < 0$	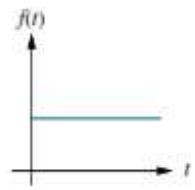	Transient response Steady-state error
Ramp	$tu(t)$	$tu(t) = t$ for $t \geq 0$ $= 0$ elsewhere	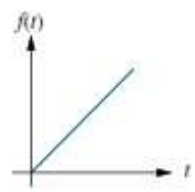	Steady-state error
Parabola	$\frac{1}{2}t^2u(t)$	$\frac{1}{2}t^2u(t) = \frac{1}{2}t^2$ for $t \geq 0$ $= 0$ elsewhere	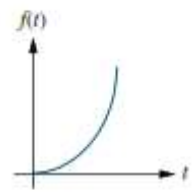	Steady-state error
Sinusoid	$\sin \omega t$		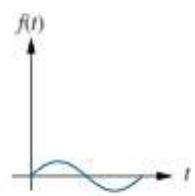	Transient response Modeling Steady-state error

Software

- MATLAB

Lecture 2 System Modelling

- Mathematical Model
  - Transfer Function Model
  - State Space Model
  - Conversion Between Them

E/M: → G(s) → SSM

→ SSM → G(s)

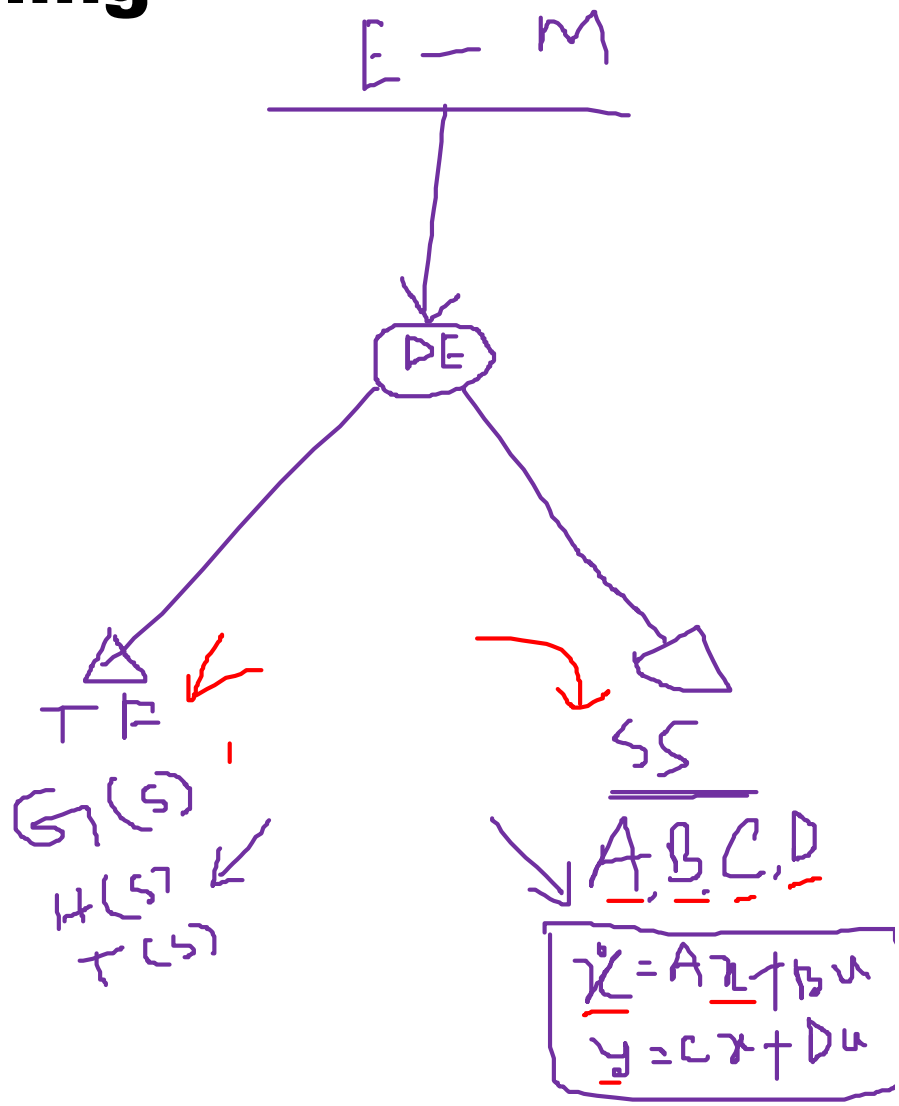

Lecture 2 Mathematical Model

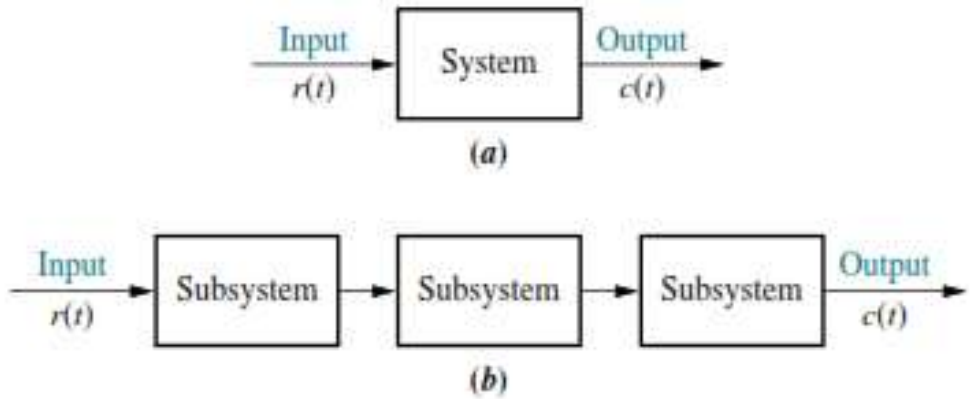

Note: The input, $r(t)$, stands for *reference input*. The output, $c(t)$, stands for *controlled variable*.

FIGURE 2.1 **a.** Block diagram representation of a system; **b.** block diagram representation of an interconnection of subsystems

$$a_n \frac{d^n c(t)}{dt^n} + a_{n-1} \frac{d^{n-1} c(t)}{dt^{n-1}} + \cdots + a_0 c(t) = b_m \frac{d^m r(t)}{dt^m} + b_{m-1} \frac{d^{m-1} r(t)}{dt^{m-1}} + \cdots + b_0 r(t) \tag{2.50}$$

Lecture 2 Mathematical Model

- Electrical Network
  - Input-Output
  - Ohm's Law, KVL, KCL etc.
- Mechanical Network
  - Input-Output
  - Newton's Law, D Alembert Principle etc.

$$a_n \frac{d^n c(t)}{dt^n} + a_{n-1} \frac{d^{n-1} c(t)}{dt^{n-1}} + \cdots + a_0 c(t) = b_m \frac{d^m r(t)}{dt^m} + b_{m-1} \frac{d^{m-1} r(t)}{dt^{m-1}} + \cdots + b_0 r(t) \tag{2.50}$$

Lecture 2 Mathematical Model

- Electrical Network

$$L\frac{di(t)}{dt} + Ri(t) + \frac{1}{C}\int_0^t i(\tau)d\tau = v(t)$$

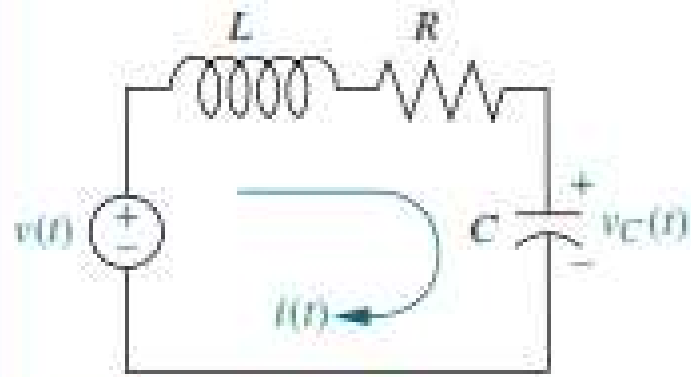

FIGURE 2.3 *RLC* network

Changing variables from current to charge using $i(t) = dq(t)/dt$ yields

$$L\frac{d^2q(t)}{dt^2} + R\frac{dq(t)}{dt} + \frac{1}{C}q(t) = v(t)$$

$$q(t) = Cv_C(t)$$

$$LC\frac{d^2v_C(t)}{dt^2} + RC\frac{dv_C(t)}{dt} + v_C(t) = v(t)$$

Outcome: Frequency Domain Function, G(s) or T(s) or H(s).

Lecture 2 Transfer Function Model

- Electrical Network

$$LC\frac{d^2v_C(t)}{dt^2} + RC\frac{dv_C(t)}{dt} + v_C(t) = v(t)$$

Taking the Laplace transform assuming zero initial conditions, rearranging terms, and simplifying yields

$$(LCs^2 + RCs + 1)V_C(s) = V(s)$$

Solving for the transfer function, $V_C(s)/V(s)$, we obtain

$$\frac{V_C(s)}{V(s)} = \frac{1/LC}{s^2 + \frac{R}{L}s + \frac{1}{LC}}$$

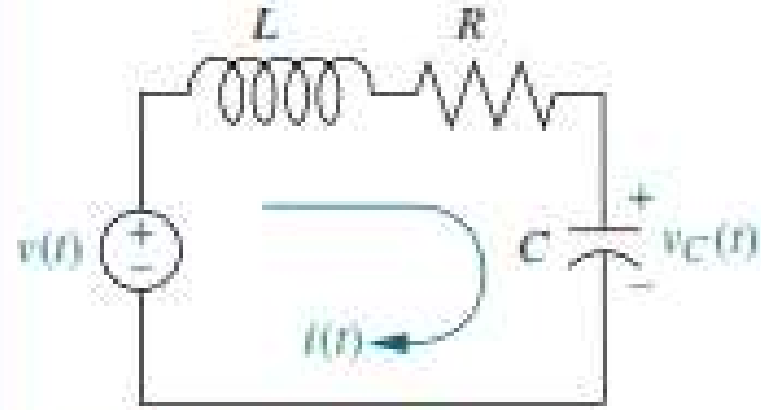

FIGURE 2.3 *RLC* network

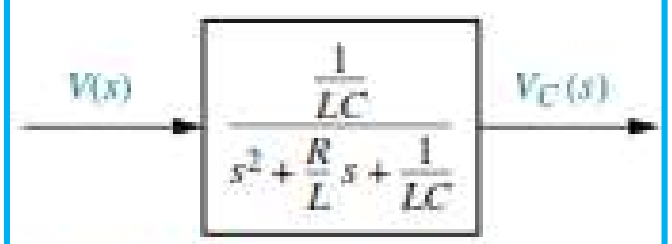

FIGURE 2.4 Block diagram of series *RLC* electrical network

Outcome: Frequency Domain Function, G(s) or T(s) or H(s).

Lecture 2 Transfer Function Model

$$G(s) = \frac{C(s)}{R(s)} = \frac{Output}{Input}$$

- Laplace Transform (self)
- Inverse Laplace Transform (self)

$$c_2 \frac{d^2y}{dt^2} + c_1 \frac{dy}{dt} + c_0 y = b_0 x$$

$G(s)$: *Open Loop TF*
$T(s)$: *Closed Loop TF*
$H(s)$: *Feedback TF*

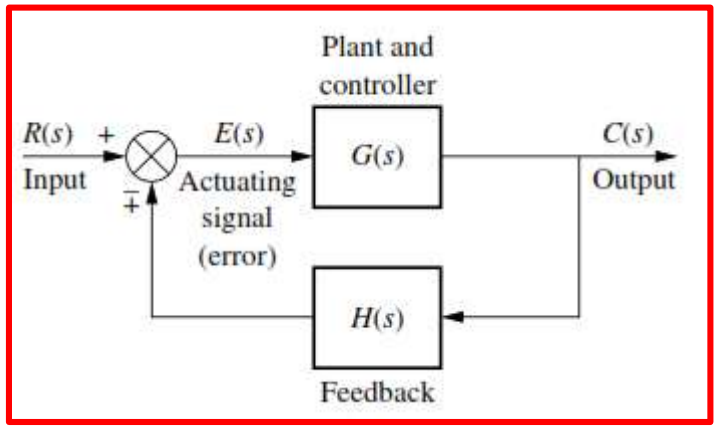

$$2\frac{d^2y}{dt^2} + 5\frac{dy}{dt} + 8y = bx$$

Outcome: Frequency Domain Function, G(s) or T(s) or H(s).

Lecture 2 Transfer Function Model-General

$$a_n \frac{d^n c(t)}{dt^n} + a_{n-1} \frac{d^{n-1} c(t)}{dt^{n-1}} + \cdots + a_0 c(t) = b_m \frac{d^m r(t)}{dt^m} + b_{m-1} \frac{d^{m-1} r(t)}{dt^{m-1}} + \cdots + b_0 r(t) \tag{2.50}$$

$$\frac{C(s)}{R(s)} = G(s) = \frac{(b_m s^m + b_{m-1} s^{m-1} + \cdots + b_0)}{(a_n s^n + a_{n-1} s^{n-1} + \cdots + a_0)}$$

FIGURE 2.2 Block diagram of a transfer function

Outcome: Frequency Domain Function, G(s) or T(s) or H(s).

Lecture 2 Transfer Function Model

- Transfer Function

TABLE 2.3 Voltage-current, voltage-charge, and impedance relationships for capacitors, resistors, and inductors

Component	Voltage-current	Current-voltage	Voltage-charge	Impedance $Z(s) = V(s)/I(s)$	Admittance $Y(s) = I(s)/V(s)$
Capacitor	$v(t) = \frac{1}{C}\int_0^t i(\tau)d\tau$	$i(t) = C\frac{dv(t)}{dt}$	$v(t) = \frac{1}{C}q(t)$	$\frac{1}{Cs}$	Cs
Resistor	$v(t) = Ri(t)$	$i(t) = \frac{1}{R}v(t)$	$v(t) = R\frac{dq(t)}{dt}$	R	$\frac{1}{R} = G$
Inductor	$v(t) = L\frac{di(t)}{dt}$	$i(t) = \frac{1}{L}\int_0^t v(\tau)d\tau$	$v(t) = L\frac{d^2q(t)}{dt^2}$	Ls	$\frac{1}{Ls}$

Note: The following set of symbols and units is used throughout this book: $v(t)$ – V (volts), $i(t)$ – A (amps), $q(t)$ – Q (coulombs), C – F (farads), R – Ω (ohms), G – Ω (mhos), L – H (henries).

$$a_n\frac{d^n c(t)}{dt^n} + a_{n-1}\frac{d^{n-1}c(t)}{dt^{n-1}} + \cdots + a_0 c(t) = b_m\frac{d^m r(t)}{dt^m} + b_{m-1}\frac{d^{m-1}r(t)}{dt^{m-1}} + \cdots + b_0 r(t) \tag{2.50}$$

Outcome: Frequency Domain Function, G(s) or T(s) or H(s).

Lecture 2 Transfer Function Model

- Electrical Network to Laplace network

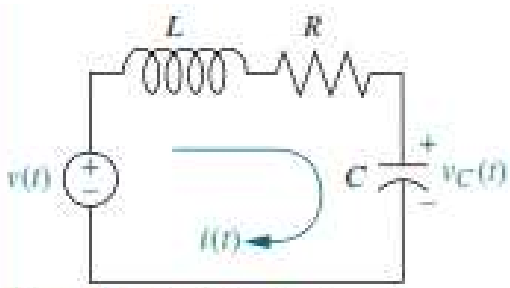

FIGURE 2.3 *RLC* network

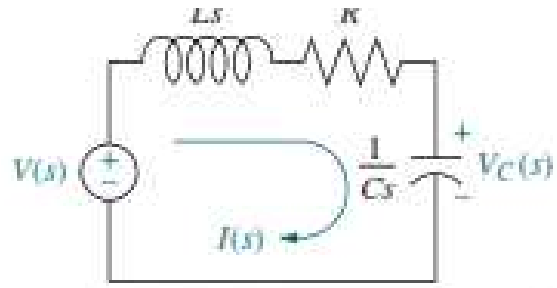

FIGURE 2.5 Laplace-transformed network

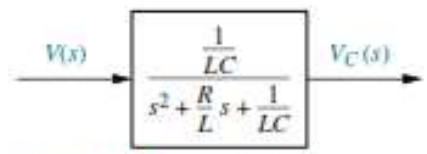

FIGURE 2.4 Block diagram of series *RLC* electrical network

$$(LCs^2 + RCs + 1)V_C(s) = V(s)$$

For the capacitor,

$$V(s) = \frac{1}{Cs}I(s)$$

For the resistor,

$$V(s) = RI(s)$$

For the inductor,

$$V(s) = LsI(s)$$

1. Redraw the original network showing all time variables, such as $v(t)$, $i(t)$, and $v_C(t)$, as Laplace transforms $V(s)$, $I(s)$, and $V_C(s)$, respectively.
2. Replace the component values with their impedance values. This replacement is similar to the case of dc circuits, where we represent resistors with their resistance values.

Now define the following transfer function:

$$\frac{V(s)}{I(s)} = Z(s)$$

Outcome: Frequency Domain Function, G(s) or T(s) or H(s).

Lecture 2 Transfer Function Model

Complex Circuits via Mesh Analysis

To solve complex electrical networks—those with multiple loops and nodes—using mesh analysis, we can perform the following steps:

1. Replace passive element values with their impedances.
2. Replace all sources and time variables with their Laplace transform.
3. Assume a transform current and a current direction in each mesh.
4. Write Kirchhoff's voltage law around each mesh.
5. Solve the simultaneous equations for the output.
6. Form the transfer function.

In order to handle multiple-node electrical networks, we can perform the following steps:

1. Replace passive element values with their admittances.
2. Replace all sources and time variables with their Laplace transform.
3. Replace transformed voltage sources with transformed current sources.
4. Write Kirchhoff's current law at each node.
5. Solve the simultaneous equations for the output.
6. Form the transfer function.

Outcome: Frequency Domain Function, G(s) or T(s) or H(s).

Lecture 2 Transfer Function Model

Translational Mechanical System
Rotational Mechanical System

$$F(s) = KX(s)$$

$$F(s) = f_v sX(s)$$

$$F(s) = Ms^2X(s)$$

nechanical components

$$Z_M(s) = \frac{F(s)}{X(s)}$$

TABLE 2.4 Force-velocity, force-displacement, and impedance translational relationships for springs, viscous dampers, and mass

Component	Force-velocity	Force-displacement	Impedence $Z_M(s) = F(s)/X(s)$
Spring 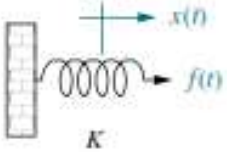	$f(t) = K\int_0^t v(\tau)d\tau$	$f(t) = Kx(t)$	K
Viscous damper 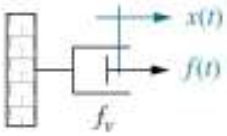	$f(t) = f_v v(t)$	$f(t) = f_v \frac{dx(t)}{dt}$	$f_v s$
Mass 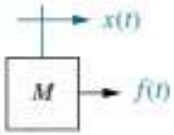	$f(t) = M\frac{dv(t)}{dt}$	$f(t) = M\frac{d^2x(t)}{dt^2}$	Ms^2

Outcome: Frequency Domain Function, G(s) or T(s) or H(s).

Lecture 2 Transfer Function Model

Translational Mechanical System

Rotational Mechanical System

TABLE 2.5 Torque-angular velocity, torque-angular displacement, and impedance rotational relationships for springs, viscous dampers, and inertia

Component	Torque-angular velocity	Torque-angular displacement	Impedence $Z_M(s) = T(s)/\theta(s)$
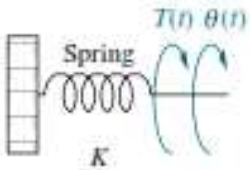	$T(t) = K\int_0^t \omega(\tau)d\tau$	$T(t) = K\theta(t)$	K
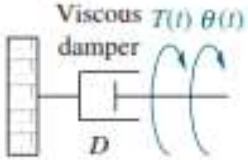	$T(t) = D\omega(t)$	$T(t) = D\dfrac{d\theta(t)}{dt}$	Ds
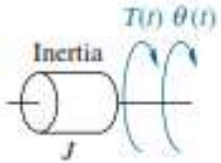	$T(t) = J\dfrac{d\omega(t)}{dt}$	$T(t) = J\dfrac{d^2\theta(t)}{dt^2}$	Js^2

Outcome: Frequency Domain Function, G(s) or T(s) or H(s).

Lecture 2 Transfer Function Model

force-displacement column in Table 2.4, we obtain for the spring,

$$F(s) = KX(s)$$

for the viscous damper,

$$F(s) = f_v sX(s)$$

and for the mass,

$$F(s) = Ms^2X(s)$$

If we define impedance for mechanical components as

$$Z_M(s) = \frac{F(s)}{X(s)}$$

Replacing each force in Figure 2.16(a) by its Laplace transform, which is in the format

$$F(s) = Z_M(s)X(s) \tag{2.116}$$

[Sum of impedances]$X(s)$ = [Sum of applied forces]

Outcome: Frequency Domain Function, G(s) or T(s) or H(s).

Lecture 2 Transfer Function Model

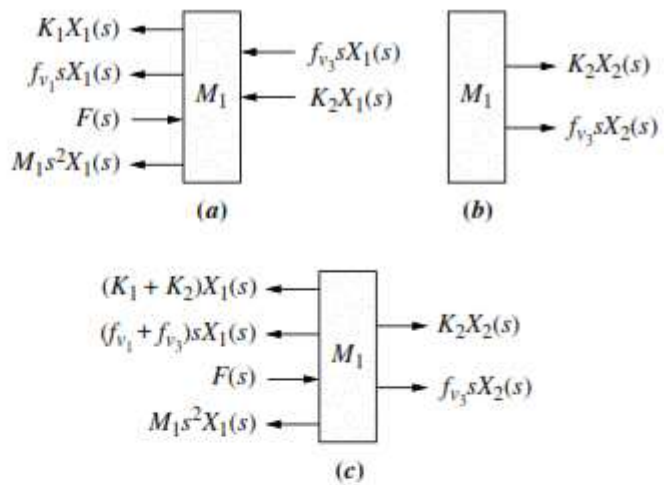

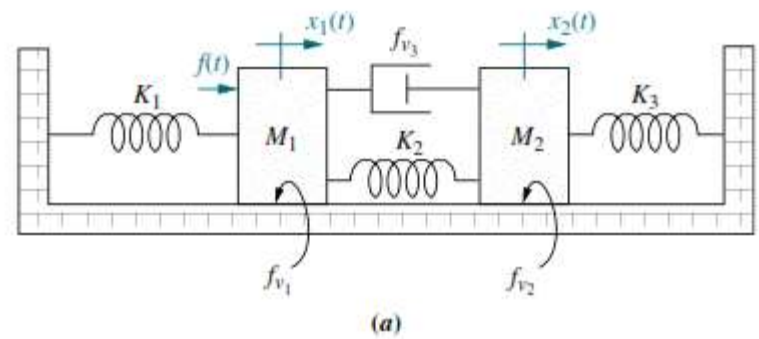

FIGURE 2.18 **a.** Forces on M_1 due only to motion of M_1; **b.** forces on M_1 due only to motion of M_2; **c.** all forces on M_1

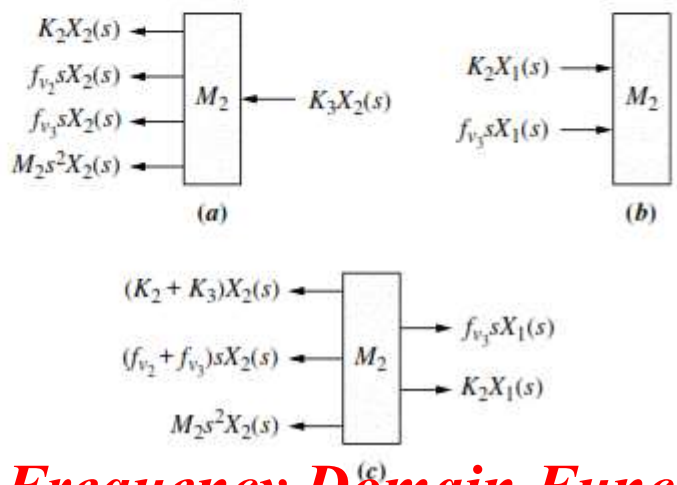

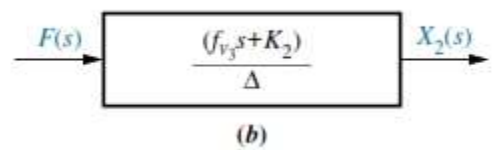

FIGURE 2.19 **a.** Forces on M_2 due only to motion of M_2; **b.** forces on M_2 due only to motion of M_1; **c.** all forces on M_2

Outcome: Frequency Domain Function, G(s) or T(s) or H(s).

Lecture 3: State Space Model

- An Extensive Example shows basic concept of state space model.

Outcome: Time Domain state differential equations and output equation.

Lecture 3: State Space Model

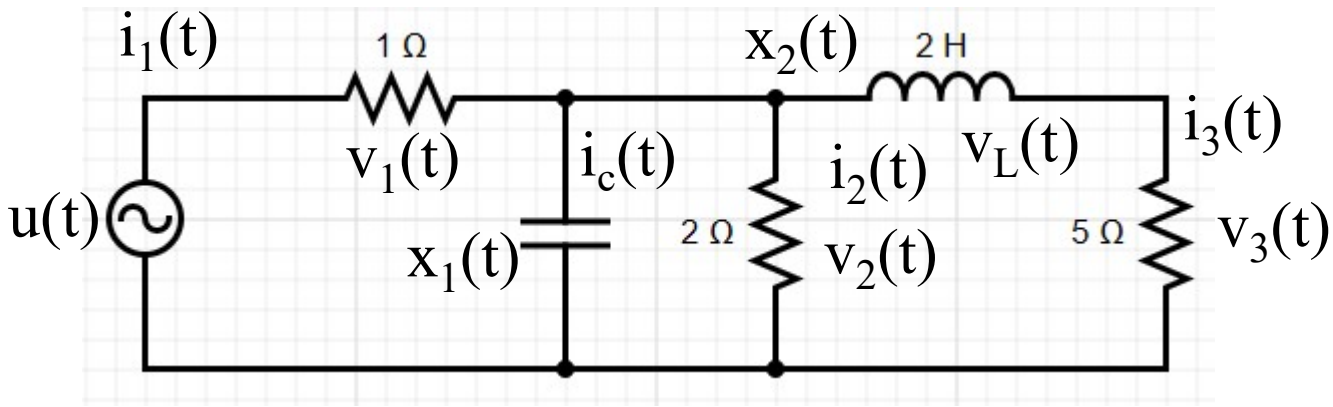

Outcome: Time Domain state differential equations and output equation.

Lecture 3: State Space Model

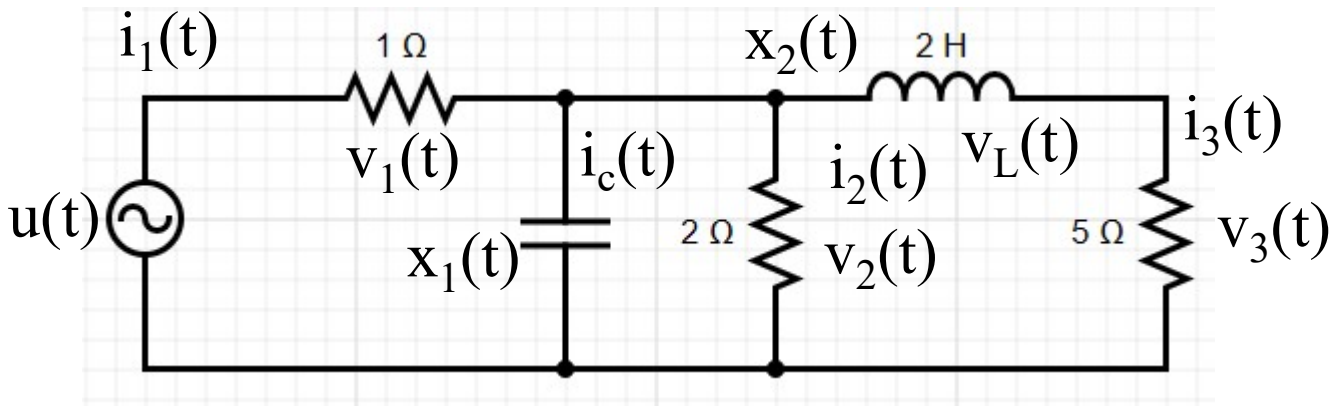

Outcome: Time Domain state differential equations and output equation.

Lecture 3: State Space Model

Example: RLC circuit demonstrates SS model

x_1: capacitor voltage = 10 (assume)
x_2: inductor current = 1 (assume)
u(t): input = 20 (assume)

$$i_1 = (x - q_1)/1 = 20 - 10 = 10\,\text{A}$$
$$v_1 = x - q_1 = 20 - 10 = 10\,\text{V}$$
$$v_2 = q_1 = 10\,\text{V}$$
$$i_2 = q_1/2 = 5\,\text{A}$$
$$i_C = i_1 - i_2 - q_2 = 10 - 5 - 1 = 4\,\text{A}$$
$$i_3 = q_2 = 1\,\text{A}$$
$$v_3 = 5q_2 = 5\,\text{V}$$
$$v_L = q_1 - v_3 = 10 - 5 = 5\,\text{V}$$

Is it possible to express all possible output by Means of x_1, x_2 and u(t)?

u(t) is known in general bu
how can you determine x_1

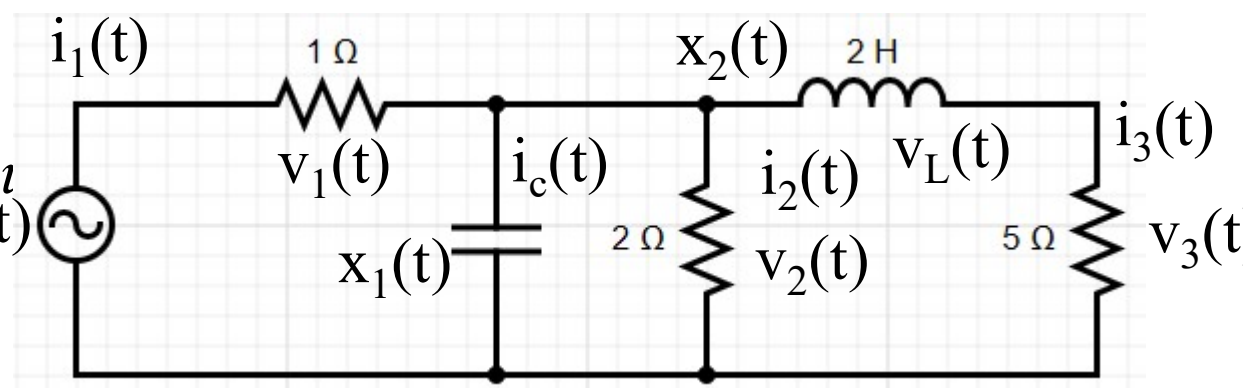

Outcome: Time Domain state differential equations and output equation.

Lecture 3: State Space Model

Example: RLC circuit demonstrates SS model

$$i_1 = (x - q_1)/1 = 20 - 10 = 10\,\text{A}$$
$$v_1 = x - q_1 = 20 - 10 = 10\,\text{V}$$
$$v_2 = q_1 = 10\,\text{V}$$
$$i_2 = q_1/2 = 5\,\text{A}$$
$$i_C = i_1 - i_2 - q_2 = 10 - 5 - 1 = 4\,\text{A}$$
$$i_3 = q_2 = 1\,\text{A}$$
$$v_3 = 5q_2 = 5\,\text{V}$$
$$v_L = q_1 - v_3 = 10 - 5 = 5\,\text{V}$$

u(t) is known in general but

how can you determine x_1 and x_2?

$$\begin{aligned}\dot{q}_1 &= i_C = i_1 - i_2 - q_2\\ &= (x - q_1) - 0.5\,q_1 - q_2\\ &= -1.5\,q_1 - q_2 + x\end{aligned}$$

$$\begin{aligned}2\dot{q}_2 &= q_1 - v_3\\ &= q_1 - 5q_2\\ \dot{q}_2 &= 0.5\,q_1 - 2.5\,q_2\end{aligned}$$

$$\boxed{\begin{aligned}\dot{x}_1 &= -1.5x_1 - x_2 + u\\ \dot{x}_2 &= .5x_1 - 2.5x_2\end{aligned}}$$

$$\boxed{\begin{aligned}\dot{x} &= Ax + Bu\\ y &= Cx + Du\end{aligned}}$$

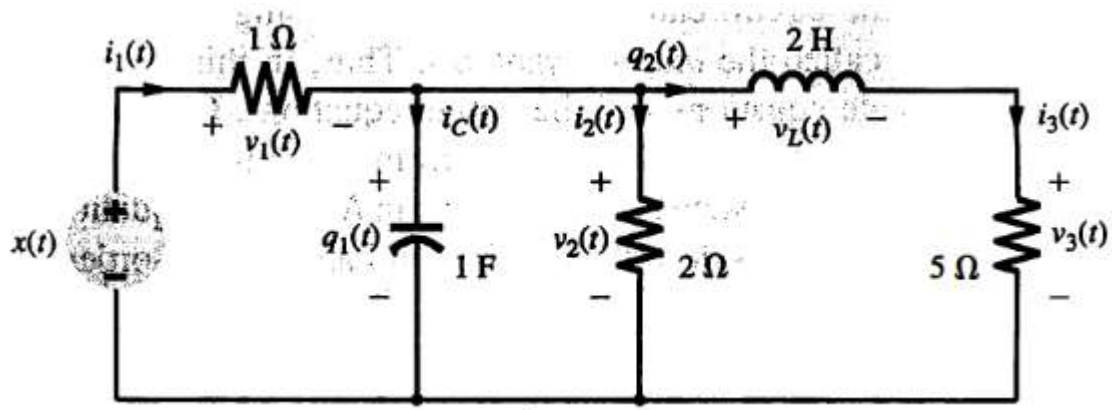

Outcome: Time Domain state differential equations and output equation.

Lecture 3: State Space Model

State-space techniques are useful not just because of their ability to provide internal system description, but for several other reasons, including the following.

1. State equations of a system provide a mathematical model of great generality that can describe not just linear systems, but also nonlinear systems; not just time-invariant systems, but also time-varying parameter systems; not just SISO (single-input/single-output) systems, but also multiple-input/multiple-output (MIMO) systems. Indeed, state equations are ideally suited for the analysis, synthesis, and optimization of MIMO systems.
2. Compact matrix notation and the powerful techniques of linear algebra greatly facilitates complex manipulations. Without such features, many important results of the modern system theory would have been difficult to obtain. State equations can yield a great deal of information about a system even when they are not solved explicitly.
3. State equations lend themselves readily to digital computer simulation of complex systems of high order, with or without nonlinearities, and with multiple inputs and outputs.
4. For second-order systems ($N = 2$), a graphical method called *phase-plane analysis* can be used on state equations, whether they are linear or nonlinear.

The real benefits of the state-space approach, however, are realized for highly complex systems of large order. Much of the book is devoted to introduction of the basic concepts of

Outcome: Time Domain state differential equations and output equation.

Lecture 3: State Space Model

We now demonstrate that for a system with many variables, such as inductor voltage, resistor voltage, and capacitor charge, we need to use differential equations only to solve for a selected subset of system variables because all other remaining system variables can be evaluated algebraically from the variables in the subset. Our examples take the following approach:

1. We select a particular *subset* of all possible system variables and call the variables in this subset *state variables.*
2. For an nth-order system, we write *n simultaneous, first-order differential equations* in terms of the state variables. We call this system of simultaneous differential equations *state equations.*
3. If we know the initial condition of all of the state variables at t_0 as well as the system input for $t \geq t_0$, we can solve the simultaneous differential equations for the state variables for $t \geq t_0$.
4. We *algebraically* combine the state variables with the system's input and find all of the other system variables for $t \geq t_0$. We call this algebraic equation the *output equation.*
5. We consider the state equations and the output equations a viable representation of the system. We call this representation of the system a *state-space representation.*

Outcome: Time Domain state differential equations and output equation.

Lecture 3: State Space Model

$$\dot{\mathbf{x}} = \mathbf{A}\mathbf{x} + \mathbf{B}\mathbf{u}$$

$$\mathbf{y} = \mathbf{C}\mathbf{x} + \mathbf{D}\mathbf{u}$$

1. A minimum number of state variables must be selected as components of the state vector. This minimum number of state variables is sufficient to describe completely the state of the system.
2. The components of the state vector (that is, this minimum number of state variables) must be linearly independent.

Outcome: Time Domain state differential equations and output equation.

Lecture 3: State Space Model

$$\dot{\mathbf{x}} = \mathbf{A}\mathbf{x} + \mathbf{B}\mathbf{u}$$

$$\mathbf{y} = \mathbf{C}\mathbf{x} + \mathbf{D}\mathbf{u}$$

for $t \geq t_0$ and initial conditions, $\mathbf{x}(t_0)$, where

$\mathbf{x}$ = state vector
$\dot{\mathbf{x}}$ = derivative of the state vector with respect to time
$\mathbf{y}$ = output vector
$\mathbf{u}$ = input or control vector
$\mathbf{A}$ = system matrix
$\mathbf{B}$ = input matrix
$\mathbf{C}$ = output matrix
$\mathbf{D}$ = feedforward matrix

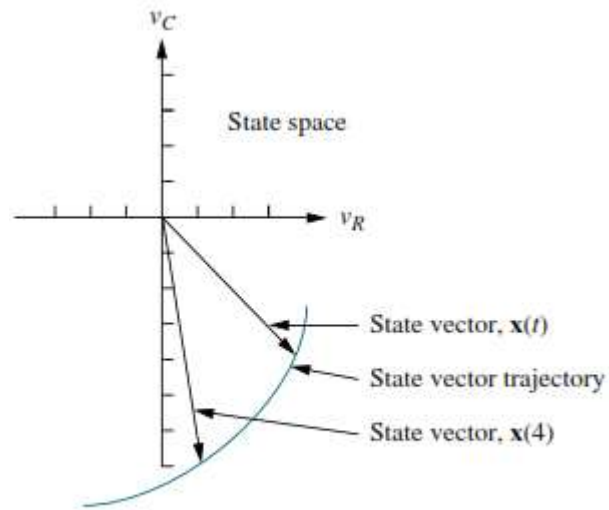

FIGURE 3.3 Graphic representation of state space and a state vector

$$\frac{dx_1}{dt} = a_{11}x_1 + a_{12}x_2 + b_1 v(t)$$

$$\frac{dx_2}{dt} = a_{21}x_1 + a_{22}x_2 + b_2 v(t)$$

$$y = c_1 x_1 + c_2 x_2 + d_1 v(t)$$

Outcome: Time Domain state differential equations and output equation.

Lecture 3: State Space Model

$$L\frac{di}{dt} + Ri = v(t)$$

$$L[sI(s) - i(0)] + RI(s) = V(s)$$

$$I(s) = \frac{1}{R}\left(\frac{1}{s} - \frac{1}{s + \frac{R}{L}}\right) + \frac{i(0)}{s + \frac{R}{L}}$$

$$i(t) = \frac{1}{R}\left(1 - e^{-(R/L)t}\right) + i(0)e^{-(R/L)t}$$

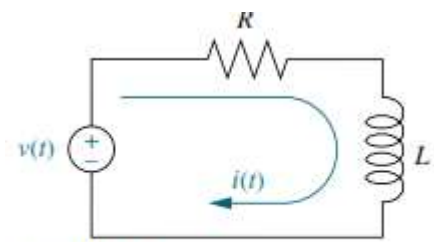

FIGURE 3.1 *RL* network

$$v_R(t) = Ri(t)$$

nductor is

$$v_L(t) = v(t) - Ri(t)$$

rrent is

$$\frac{di}{dt} = \frac{1}{L}[v(t) - Ri(t)]$$

State vector/variables
State differential equation
Derivative of states
Linear combination

Outcome: Time Domain state differential equations and output equation.

Lecture 3: State Space Model

$$\frac{L}{R}\frac{dv_R}{dt} + v_R = v(t)$$

$$L\frac{di}{dt} + Ri + \frac{1}{C}\int i\,dt = v(t)$$

Converting to charge, using $i(t) = dq/dt$, we get

$$L\frac{d^2q}{dt^2} + R\frac{dq}{dt} + \frac{1}{C}q = v(t)$$

$$\frac{dq}{dt} = i$$

$$\frac{di}{dt} = -\frac{1}{LC}q - \frac{R}{L}i + \frac{1}{L}v(t)$$

$$v_L(t) = -\frac{1}{C}q(t) - Ri(t) + v(t)$$

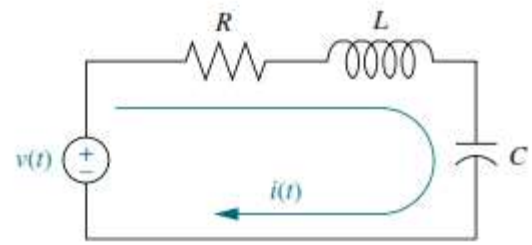

FIGURE 3.2 *RLC* network

Linear combination
Linear independence
System variable
State variable
State vector
State space
State Equation
Output Equation

Outcome: Time Domain state differential equations and output equation.

Lecture 3

- Comparison between frequency domain modelling and time domain modelling (Section: 3.1)

Lecture 3: Model Conversion

- Phase variables method

$$\frac{d^n y}{dt^n} + a_{n-1}\frac{d^{n-1}y}{dt^{n-1}} + \cdots + a_1\frac{dy}{dt} + a_0 y = b_0 u$$

and differentiating both sides yields

Choosing the state variables, x_i, we get

$$x_1 = y$$
$$x_2 = \frac{dy}{dt}$$
$$x_3 = \frac{d^2y}{dt^2}$$
$$\vdots$$
$$x_n = \frac{d^{n-1}y}{dt^{n-1}}$$

$$\dot{x}_1 = \frac{dy}{dt}$$
$$\dot{x}_2 = \frac{d^2y}{dt^2}$$
$$\dot{x}_3 = \frac{d^3y}{dt^3}$$
$$\vdots$$
$$\dot{x}_n = \frac{d^n y}{dt^n}$$

$$\dot{x}_1 = x_2$$
$$\dot{x}_2 = x_3$$
$$\vdots$$
$$\dot{x}_{n-1} = x_n$$
$$\dot{x}_n = -a_0x_1 - a_1x_2 \cdots - a_{n-1}x_n + b_0u$$

Outcome: Time Domain state differential equations and output equation.

Lecture 3: Model Conversion

$$\dot{\mathbf{x}} = \mathbf{A}\mathbf{x} + \mathbf{B}\mathbf{u}$$

$$\mathbf{y} = \mathbf{C}\mathbf{x} + \mathbf{D}\mathbf{u}$$

- Phase variables method

$$\begin{bmatrix} \dot{x}_1 \\ \dot{x}_2 \\ \dot{x}_3 \\ \vdots \\ \dot{x}_{n-1} \\ \dot{x}_n \end{bmatrix} = \begin{bmatrix} 0 & 1 & 0 & 0 & 0 & 0 & \cdots & 0 \\ 0 & 0 & 1 & 0 & 0 & 0 & \cdots & 0 \\ 0 & 0 & 0 & 1 & 0 & 0 & \cdots & 0 \\ \vdots & & & & & & & \\ 0 & 0 & 0 & 0 & 0 & 0 & \cdots & 1 \\ -a_0 & -a_1 & -a_2 & -a_3 & -a_4 & -a_5 & \cdots & -a_{n-1} \end{bmatrix} \begin{bmatrix} x_1 \\ x_2 \\ x_3 \\ \vdots \\ x_{n-1} \\ x_n \end{bmatrix} + \begin{bmatrix} 0 \\ 0 \\ 0 \\ \vdots \\ 0 \\ b_0 \end{bmatrix} u \tag{3.52}$$

$$y = \begin{bmatrix} 1 & 0 & 0 & \cdots & 0 \end{bmatrix} \begin{bmatrix} x_1 \\ x_2 \\ x_3 \\ \vdots \\ x_{n-1} \\ x_n \end{bmatrix}$$

Outcome: Time Domain state differential equations and output equation.

Lecture 3: Model Conversion

$$\dot{\mathbf{x}} = \mathbf{A}\mathbf{x} + \mathbf{B}\mathbf{u}$$
$$\mathbf{y} = \mathbf{C}\mathbf{x} + \mathbf{D}\mathbf{u}$$

Laplace transform assuming zero initial conditions:[8]

$$s\mathbf{X}(s) = \mathbf{A}\mathbf{X}(s) + \mathbf{B}\mathbf{U}(s)$$
$$\mathbf{Y}(s) = \mathbf{C}\mathbf{X}(s) + \mathbf{D}\mathbf{U}(s)$$

$$(s\mathbf{I} - \mathbf{A})\mathbf{X}(s) = \mathbf{B}\mathbf{U}(s)$$

$$\mathbf{X}(s) = (s\mathbf{I} - \mathbf{A})^{-1}\mathbf{B}\mathbf{U}(s)$$

$$\mathbf{Y}(s) = \mathbf{C}(s\mathbf{I} - \mathbf{A})^{-1}\mathbf{B}\mathbf{U}(s) + \mathbf{D}\mathbf{U}(s) = [\mathbf{C}(s\mathbf{I} - \mathbf{A})^{-1}\mathbf{B} + \mathbf{D}]\mathbf{U}(s)$$

$$\boxed{\dot{\mathbf{x}} = \mathbf{A}\mathbf{x} + \mathbf{B}\mathbf{u}}$$

$$\boxed{\mathbf{y} = \mathbf{C}\mathbf{x} + \mathbf{D}\mathbf{u}}$$

$$\boxed{T(s) = \frac{Y(s)}{U(s)} = \mathbf{C}(s\mathbf{I} - \mathbf{A})^{-1}\mathbf{B} + \mathbf{D}}$$

Outcome: Frequency Domain Function T(s)

Lecture 3: Model Conversion

$$\dot{\mathbf{x}} = \mathbf{A}\mathbf{x} + \mathbf{B}\mathbf{u}$$

$$\mathbf{y} = \mathbf{C}\mathbf{x} + \mathbf{D}\mathbf{u}$$

- Phase variables method

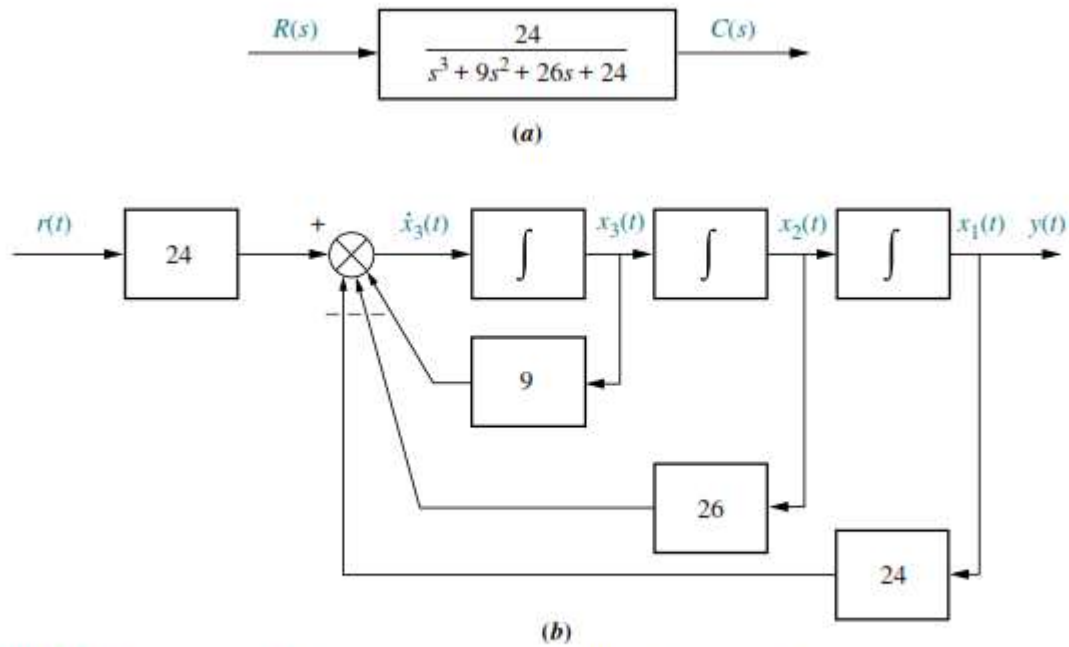

IGURE 3.10 **a.** Transfer function; **b.** equivalent block diagram showing phase variables. Note: $y(t) = c(t)$.

Outcome: T(s) or A, B, C, D

Lecture 4: Reduction Techniques

SFG → T(s) Com
SFG → BD → T(s)

BD → T(s)
BD → SFG → MR → T(s)

- **Block Diagram Reduction>> T(s)**
- *Signal Flow Graph*
- *Conversion of Block Diagram to Signal Flow Graph*
- *Signal Flow Graph of State Space Model*
- **Reduction of Signal Flow Graph>>Mason's Rule>>T(s)**

3

$\dot{x} = Ax + Bu$
$y = Cx + Du$ → SFG → T(s) | Com
→ MR → T(s)
→ BD → T(s)

In this chapter, multiple subsystems are represented in two ways: as block diagrams and as signal-flow graphs. Although neither representation is limited to a particular analysis and design technique, block diagrams are usually used for frequency-domain analysis and design, and signal-flow graphs for state-space analysis.

Outcome: T(s)

Lecture 4: Block Reduction

BD, SF

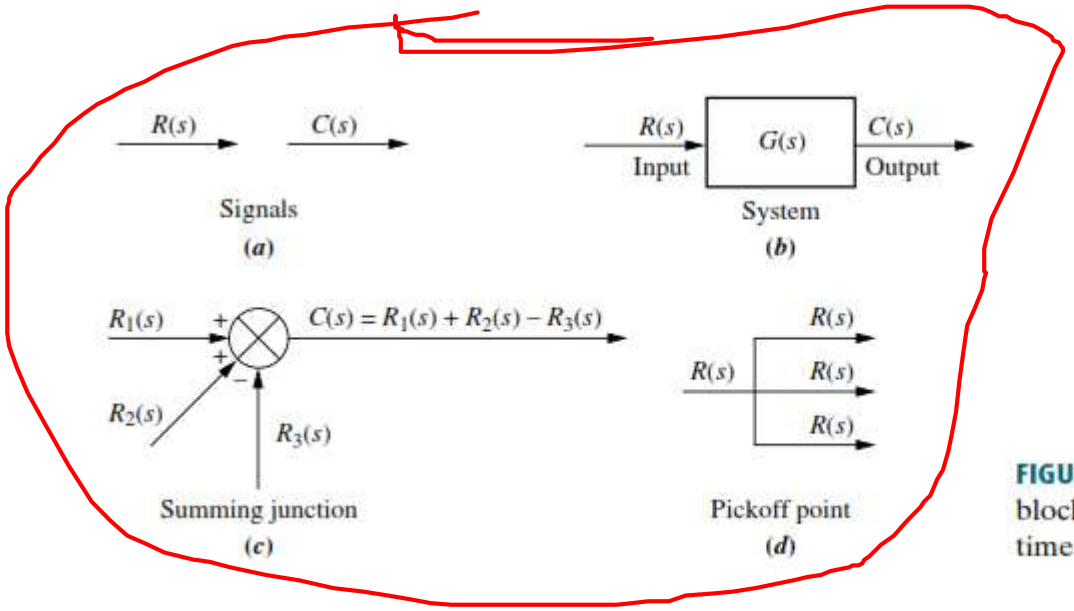

FIGURE 5.2 Components of a block diagram for a linear, time-invariant system

Outcome: T(s)

Lecture 4: Block Reduction

- Cascade Form

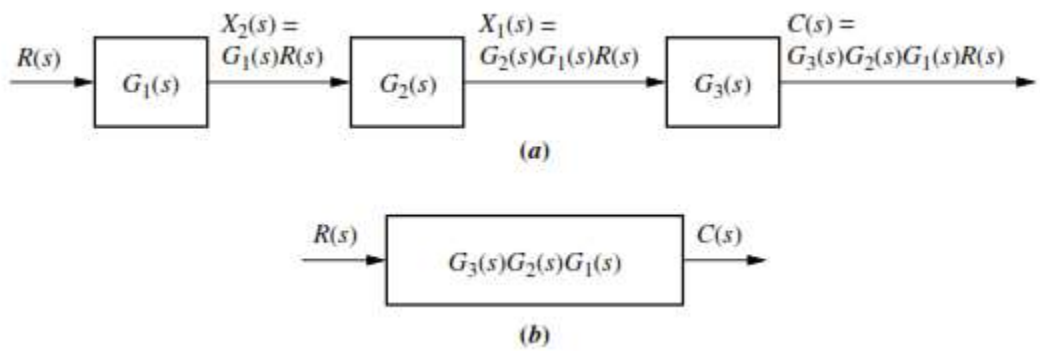

FIGURE 5.3 **a.** Cascaded subsystems; **b.** equivalent transfer function

$$G_e(s) = G_3(s)G_2(s)G_1(s)$$

Outcome: T(s)

Lecture 4: Block Reduction

- Parallel Form

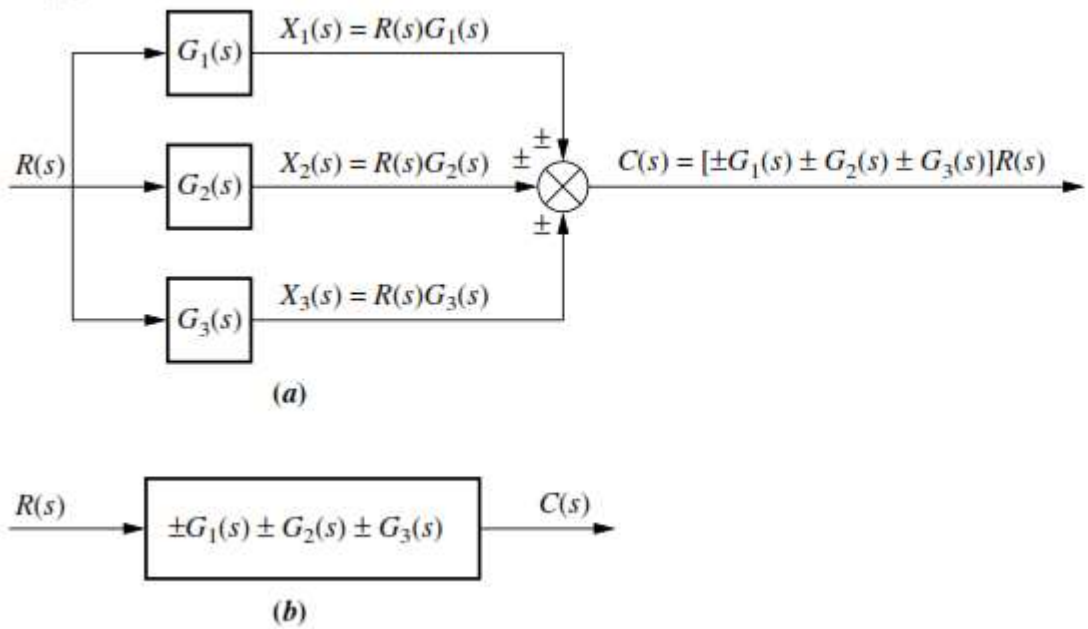

FIGURE 5.5 **a.** Parallel subsystems; **b.** equivalent transfer function

$$G_e(s) = \pm G_1(s) \pm G_2(s) \pm G_3(s)$$

Outcome: T(s)

Lecture 4: Block Reduction

- Feedback Form

$$E(s) = R(s) \mp C(s)H(s)$$

$$E(s) = \frac{C(s)}{G(s)}$$

$$\boxed{G_e(s) = \frac{G(s)}{1 \pm G(s)H(s)}}$$

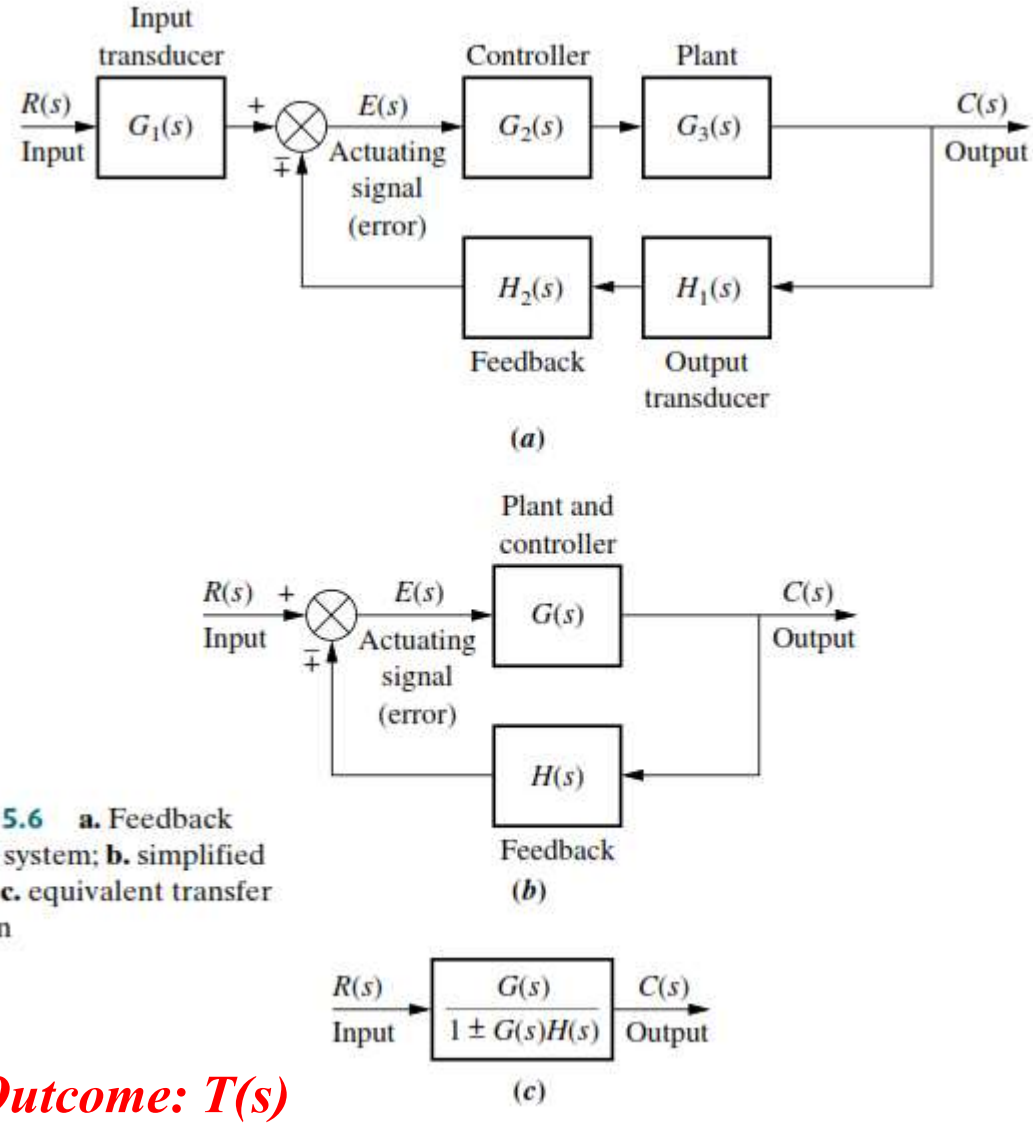

FIGURE 5.6 **a.** Feedback control system; **b.** simplified model; **c.** equivalent transfer function

Outcome: T(s)

Lecture 4: Block Reduction

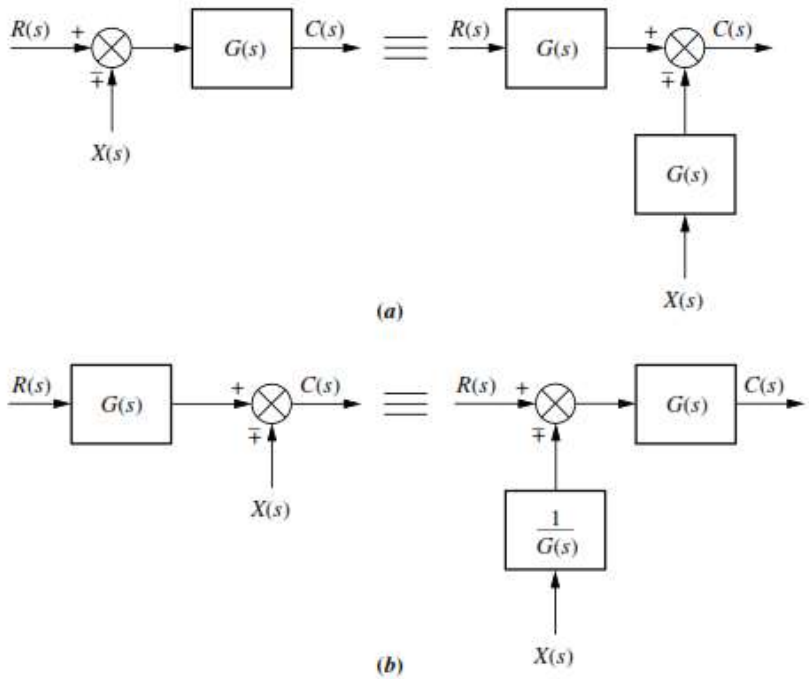

FIGURE 5.7 Block diagram algebra for summing junctions—equivalent forms for moving a block **a.** to the left past a summing junction; **b.** to the right past a summing junction

Outcome: T(s)

Lecture 4: Block Reduction

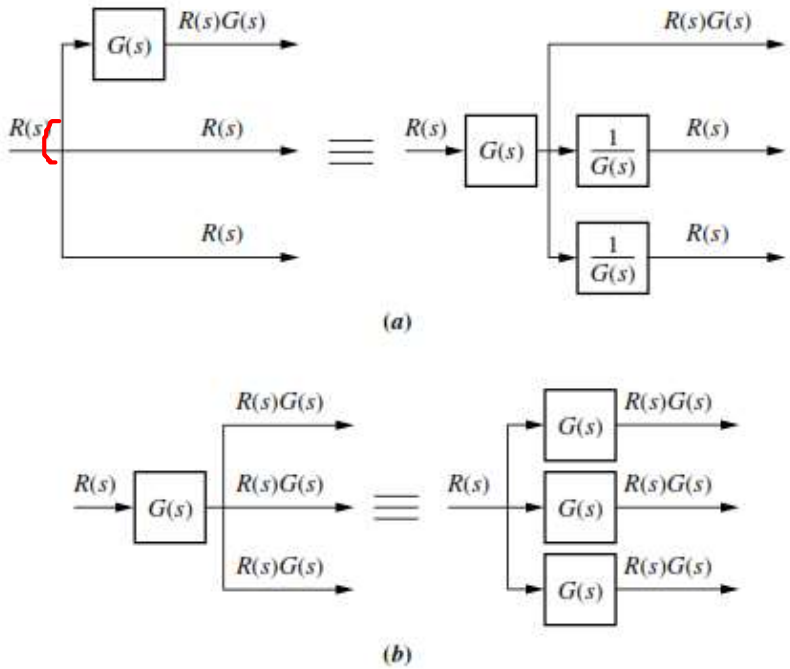

FIGURE 5.8 Block diagram algebra for pickoff points—equivalent forms for moving a block **a.** to the left past a pickoff point; **b.** to the right past a pickoff point

Outcome: T(s)

Lecture 4: Block Reduction

Example 5.2

Block Diagram Reduction by Moving Blocks

PROBLEM: Reduce the system shown in Figure 5.11 to a single transfer function.

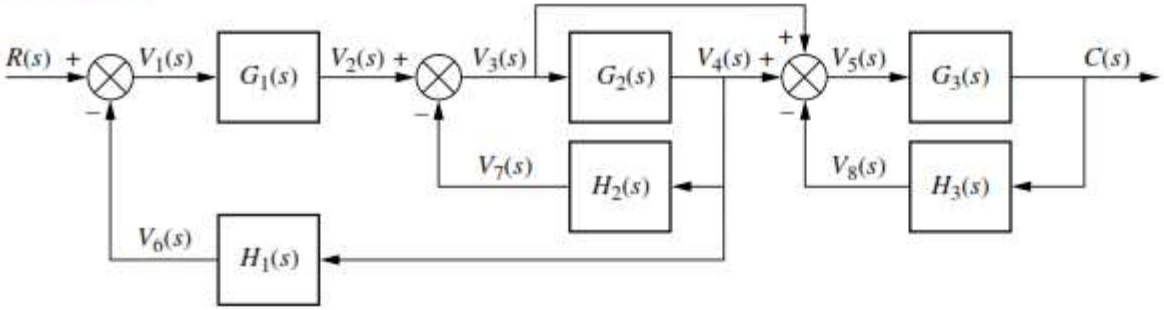

FIGURE 5.11 Block diagram for Example 5.2

Outcome: T(s)

Lecture 4: Block Red

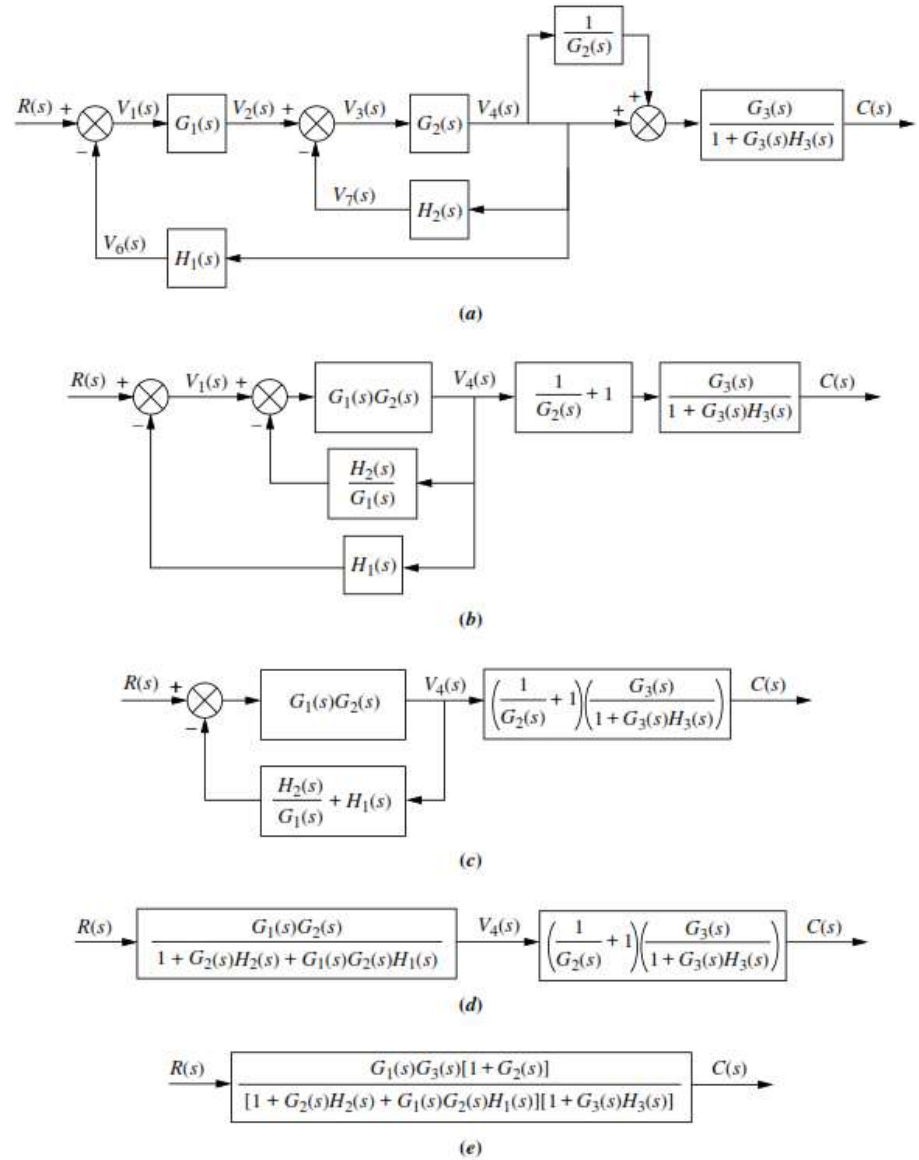

FIGURE 5.12 Steps in the block diagram reduction for Example 5.2

Lecture 4: Block Reduction

- A signal flow graph consists only of branches, which represent systems, and nodes, which represent signals.

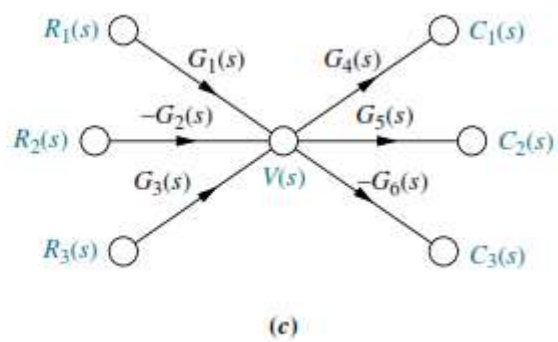

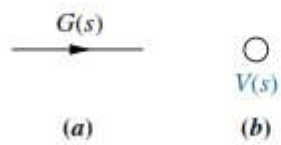

FIGURE 5.17 Signal-flow graph components: **a.** system; **b.** signal; **c.** interconnection of systems and signals

Lecture 4: Block Reduction

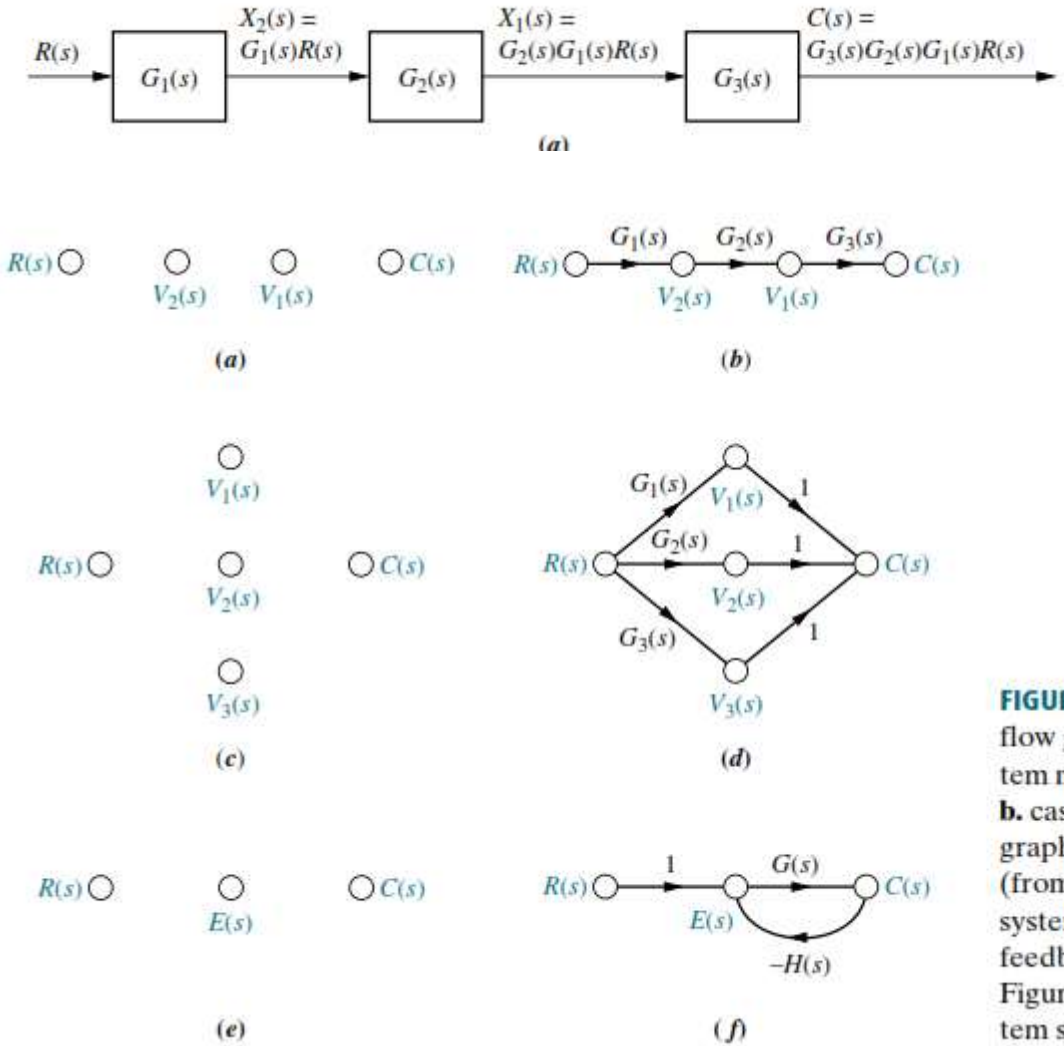

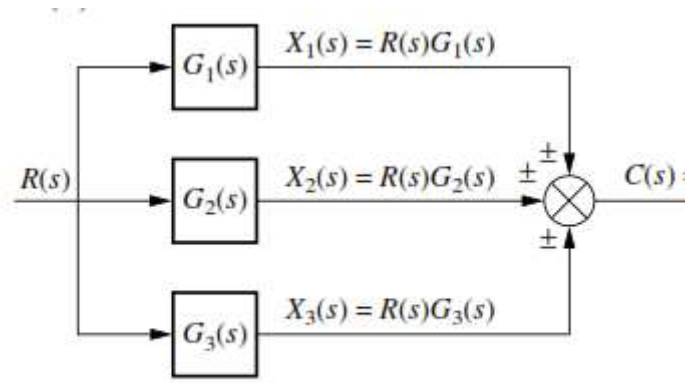

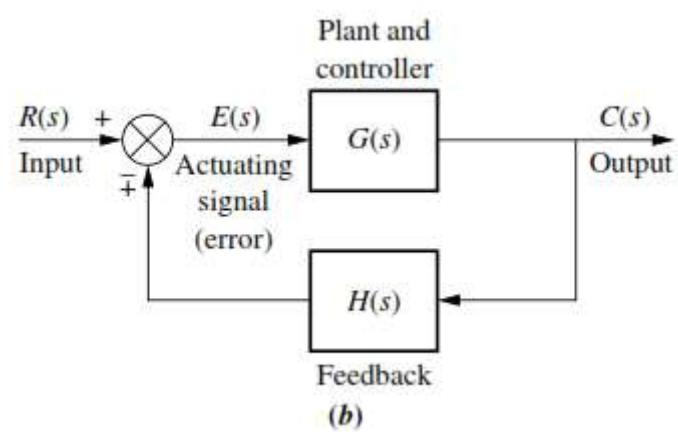

FIGURE 5.18
flow graphs: a [illegible] tem nodes (from Figure 5.3(*a*)); **b.** cascaded system signal-flow graph; **c.** parallel system nodes (from Figure 5.5(*a*)); **d.** parallel system signal-flow graph; **e.** feedback system nodes (from Figure 5.6(*b*)); **f.** feedback system signal-flow graph

Lecture 4: Block Reduction

Example 5.2

Block Diagram Reduction by Moving Blocks

PROBLEM: Reduce the system shown in Figure 5.11 to a single transfer function.

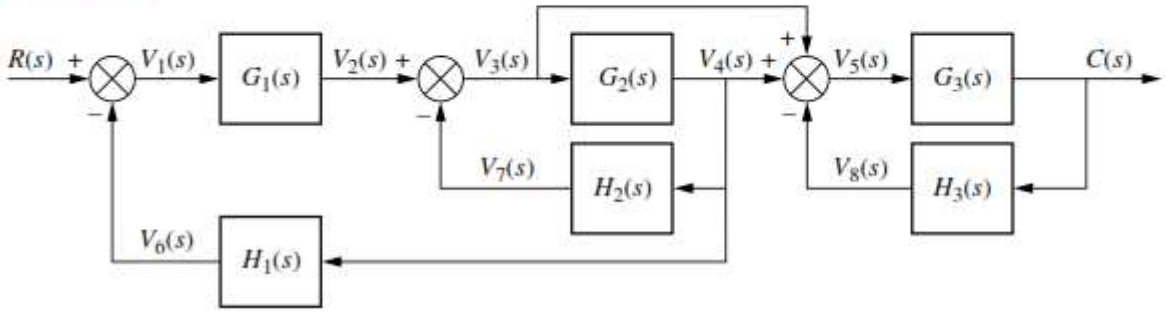

FIGURE 5.11 Block diagram for Example 5.2

PROBLEM: Convert the block diagram of Figure 5.11 to a signal-flow graph.

Lecture 4: Block Reduction

5.5 Mason's Rule

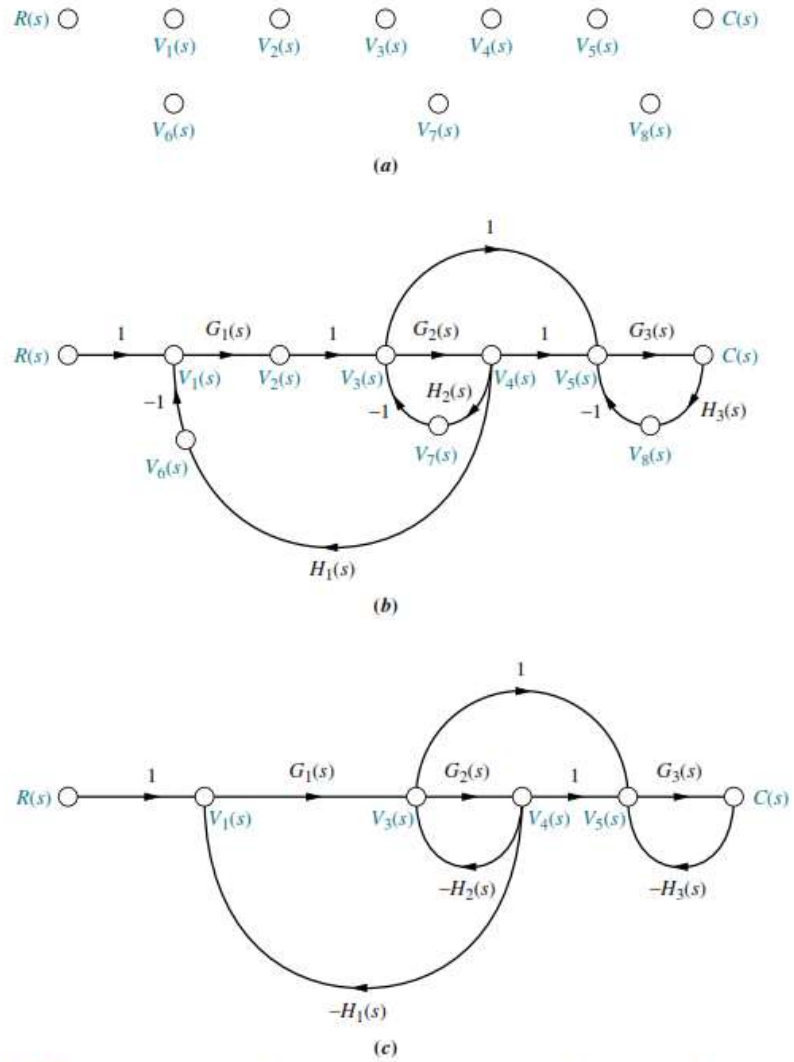

FIGURE 5.19 Signal-flow graph development: **a.** signal nodes; **b.** signal-flow graph; **c.** simplified signal-flow graph

Lecture 4: Block Reduction

5.5 Mason's Rule

Loop gain. The product of branch gains found by traversing a path that starts at a node and ends at the same node, following the direction of the signal flow, without passing through any other node more than once. For examples of loop gains, see Figure 5.20. There are four loop gains:

1. $G_2(s)H_1(s)$ (5.25a)
2. $G_4(s)H_2(s)$ (5.25b)
3. $G_4(s)G_5(s)H_3(s)$ (5.25c)
4. $G_4(s)G_6(s)H_3(s)$ (5.25d)

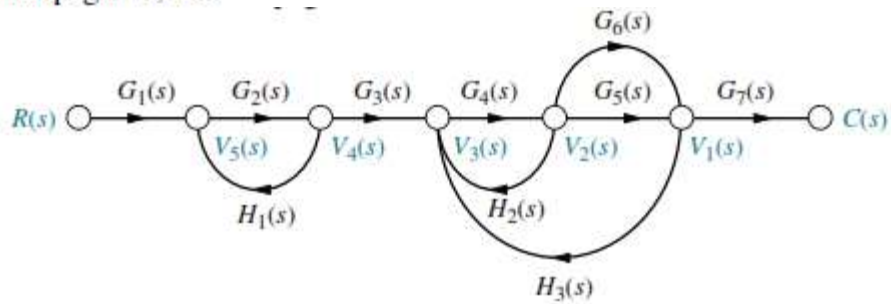

FIGURE 5.20 Signal-flow graph for demonstrating Mason's rule

Forward-path gain. The product of gains found by traversing a path from the input node to the output

1. $G_1(s)G_2(s)G_3(s)G_4(s)G_5(s)G_7(s)$
2. $G_1(s)G_2(s)G_3(s)G_4(s)G_6(s)G_7(s)$

Nontouching loops. Loops that do not have loop $G_2(s)H_1(s)$ does not touch loops $G_4(s)H_2(s)$, (

Nontouching-loop gain. The product of loop gains from nontouching loops taken two, three, four, or more at a time. In Figure 5.20 the product of loop gain $G_2(s)H_1(s)$ and loop gain $G_4(s)H_2(s)$ is a nontouching-loop gain taken two at a time. In summary, all three of the nontouching-loop gains taken two at a time are

1. $[G_2(s)H_1(s)][G_4(s)H_2(s)]$ (5.27a)
2. $[G_2(s)H_1(s)][G_4(s)G_5(s)H_3(s)]$ (5.27b)
3. $[G_2(s)H_1(s)][G_4(s)G_6(s)H_3(s)]$ (5.27c)

The product of loop gains $[G_4(s)G_5(s)H_3(s)][G_4(s)G_6(s)H_3(s)]$ is not a nontouching-loop gain since these two loops have nodes in common. In our example there are no nontouching-loop gains taken three at a time since three nontouching loops do not exist in the example.

We are now ready to state Mason's rule.

Lecture 4: Block Reduction

Mason's Rule

The transfer function, $C(s)/R(s)$, of a system represented by a signal-flow graph is

$$\boxed{G(s) = \frac{C(s)}{R(s)} = \frac{\sum_k T_k \Delta_k}{\Delta}} \tag{5.28}$$

where

k = number of forward paths
T_k = the kth forward-path gain
Δ = 1 − Σ loop gains + Σ nontouching-loop gains taken two at a time − Σ nontouching-loop gains taken three at a time + Σ nontouching-loop gains taken four at a time − . . .
Δ_k = Δ − Σ loop gain terms in Δ that touch the kth forward path. In other words, Δ_k is formed by eliminating from Δ those loop gains that touch the kth forward path.

Notice the alternating signs for the components of Δ. The following example will help clarify Mason's rule.

Lecture 4: Block Reduction

Mason's Rule

The transfer function, $C(s)/R(s)$, of a system represented by a signal-flow graph is

$$\boxed{G(s) = \frac{C(s)}{R(s)} = \frac{\sum_k T_k \Delta_k}{\Delta}} \tag{5.28}$$

where

k = number of forward paths

T_k = the kth forward-path gain

Δ = 1 − Σ loop gains + Σ nontouching-loop gains taken two at a time − Σ nontouching-loop gains taken three at a time + Σ nontouching-loop gains taken four at a time − . . .

Δ_k = Δ − Σ loop gain terms in Δ that touch the kth forward path. In other words, Δ_k is formed by eliminating from Δ those loop gains that touch the kth forward path.

Notice the alternating signs for the components of Δ. The following example will help clarify Mason's rule.

Lecture 4: Block Reduction

Transfer Function via Mason's Rule

PROBLEM: Find the transfer function, $C(s)/R(s)$, for the signal-flow graph in Figure 5.21.

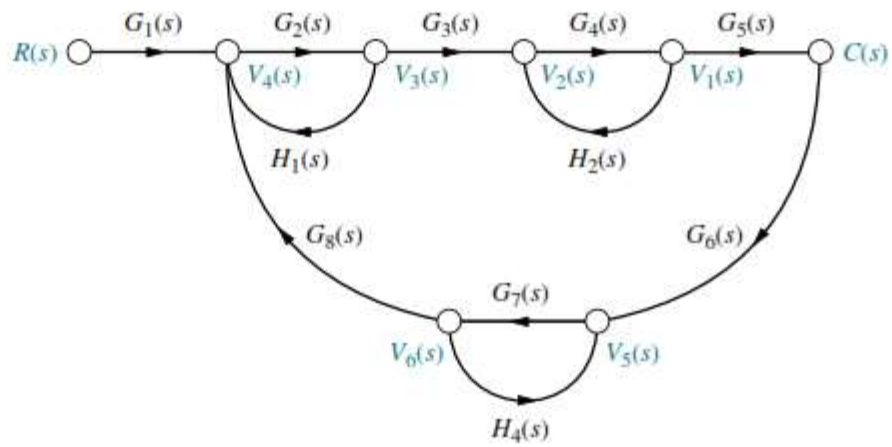

FIGURE 5.21 Signal-flow graph for Example 5.7

$$G_1(s)G_2(s)G_3(s)G_4(s)G_5(s)$$

Lecture 4: Block Reduction

Transfer Function via Mason's Rule

PROBLEM: Find the transfer function, $C(s)/R(s)$, for the signal-flow graph in Figure 5.21.

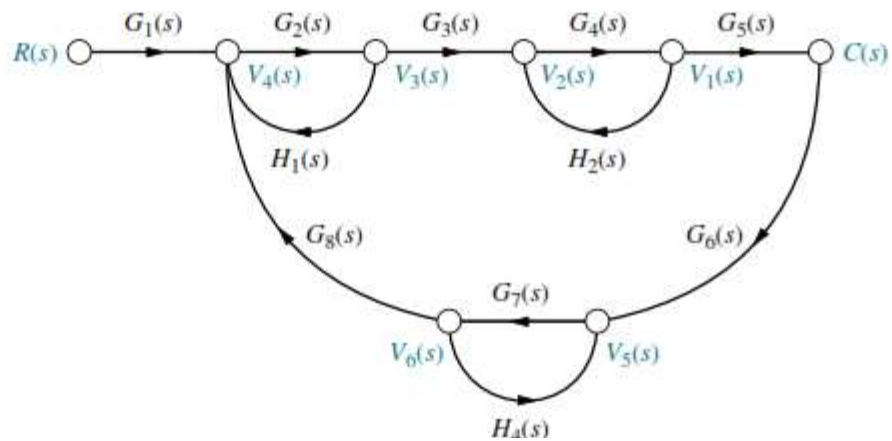

FIGURE 5.21 Signal-flow graph for Example 5.7

$$\text{Loop 1 and loop 2}: \; G_2(s)H_1(s)G_4(s)H_2(s)$$

$$\text{Loop 1 and loop 3}: \; G_2(s)H_1(s)G_7(s)H_4(s)$$

$$\text{Loop 2 and loop 3}: \; G_4(s)H_2(s)G_7(s)H_4(s)$$

Finally, the *nontouching loops taken three at a time* are as follows:

$$\text{Loops 1, 2, and 3}: \; G_2(s)H_1(s)G_4(s)H_2(s)G_7(s)H_4(s)$$

Lecture 4: Block Reduction

Transfer Function via Mason's Rule

PROBLEM: Find the transfer function, $C(s)/R(s)$, for the signal-flow graph in Figure 5.21.

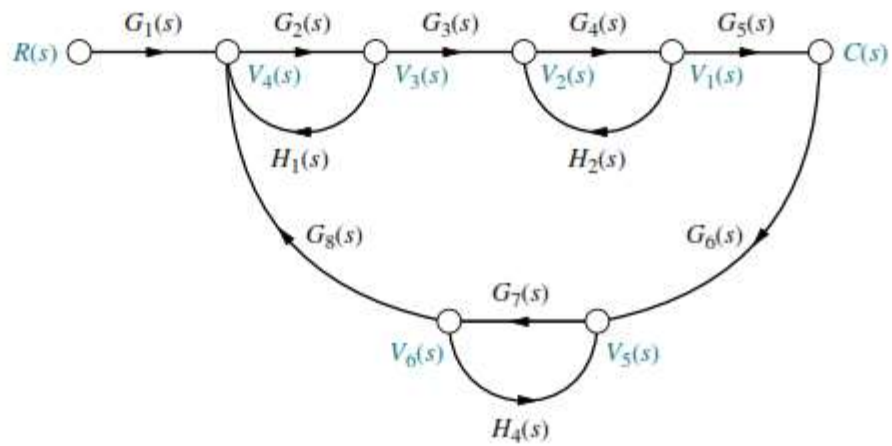

FIGURE 5.21 Signal-flow graph for Example 5.7

$$
\begin{aligned}
\Delta = 1 \; & -[G_2(s)H_1(s) + G_4(s)H_2(s) + G_7(s)H_4(s) \\
& \qquad + G_2(s)G_3(s)G_4(s)G_5(s)G_6(s)G_7(s)G_8(s)] \\
& +[G_2(s)H_1(s)G_4(s)H_2(s) + G_2(s)H_1(s)G_7(s)H_4(s) \\
& \qquad + G_4(s)H_2(s)G_7(s)H_4(s)] \\
& -[G_2(s)H_1(s)G_4(s)H_2(s)G_7(s)H_4(s)]
\end{aligned}
$$

Lecture 4: Block Reduction

Transfer Function via Mason's Rule

PROBLEM: Find the transfer function, $C(s)/R(s)$, for the signal-flow graph in Figure 5.21.

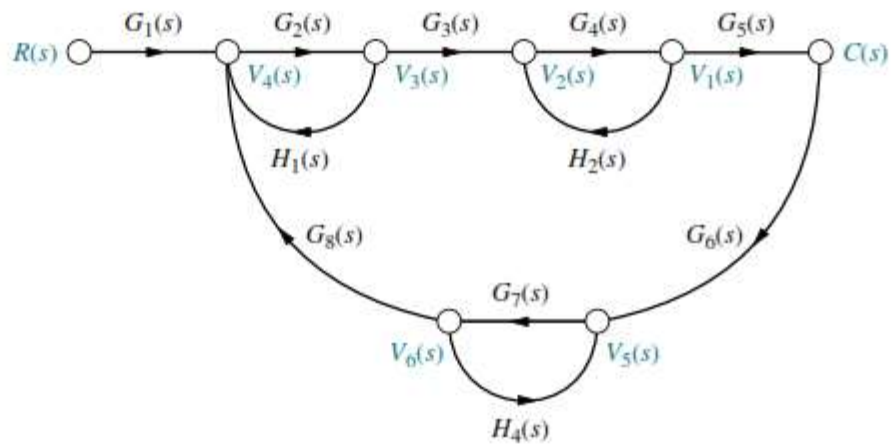

FIGURE 5.21 Signal-flow graph for Example 5.7

$$\Delta_1 = 1 - G_7(s)H_4(s)$$

$$G(s) = \frac{T_1\Delta_1}{\Delta} = \frac{[G_1(s)G_2(s)G_3(s)G_4(s)G_5(s)][1 - G_7(s)H_4(s)]}{\Delta}$$

Lecture 4: Block Reduction

Signal-Flow Graphs of State Equations

Consider the following state and output equations:

$$\dot{x}_1 = 2x_1 - 5x_2 + 3x_3 + 2r$$
$$\dot{x}_2 = -6x_1 - 2x_2 + 2x_3 + 5r$$
$$\dot{x}_3 = x_1 - 3x_2 - 4x_3 + 7r$$
$$y = -4x_1 + 6x_2 + 9x_3$$

$$\dot{x} = \begin{bmatrix} 2 & -5 & 3 \\ -6 & -2 & 2 \\ 1 & -3 & -4 \end{bmatrix} x + \begin{bmatrix} 2 \\ 5 \\ 7 \end{bmatrix} r$$
$$y = \begin{bmatrix} -4 & 6 & 9 \end{bmatrix} x + [0] r$$

$$\dot{x} = Ax + Bu$$
$$y = Cx + Du$$

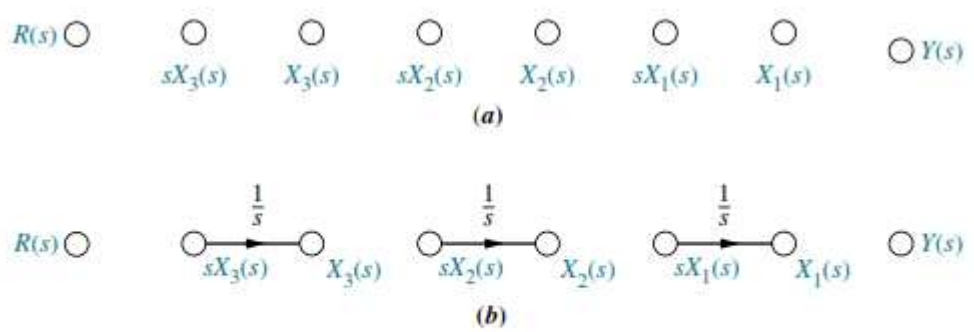

FIGURE 5.22 Stages of development of a signal-flow graph for the system of Eqs. (5.36): **a.** Place nodes; **b.** interconnect state variables and derivatives; (*figure continues*)

Lecture 4: Block Reduction

Consider the following state and output equations:

$$\dot{x}_1 = 2x_1 - 5x_2 + 3x_3 + 2r$$
$$\dot{x}_2 = -6x_1 - 2x_2 + 2x_3 + 5r$$
$$\dot{x}_3 = x_1 - 3x_2 - 4x_3 + 7r$$
$$y = -4x_1 + 6x_2 + 9x_3$$

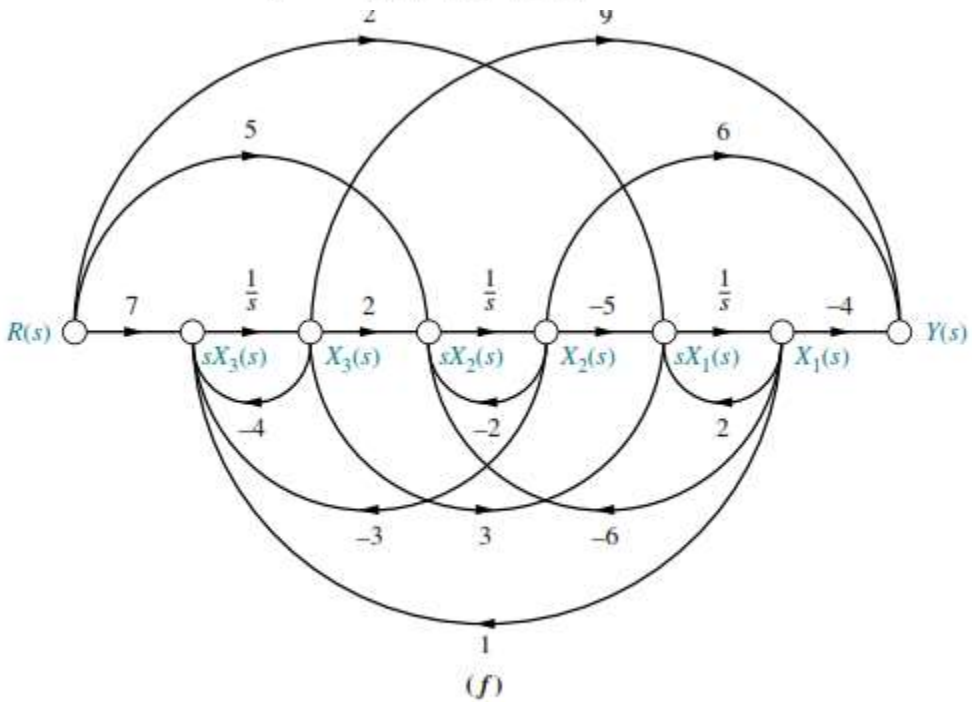

FIGURE 5.22 (*Continued*) **f.** form output (*figure end*)

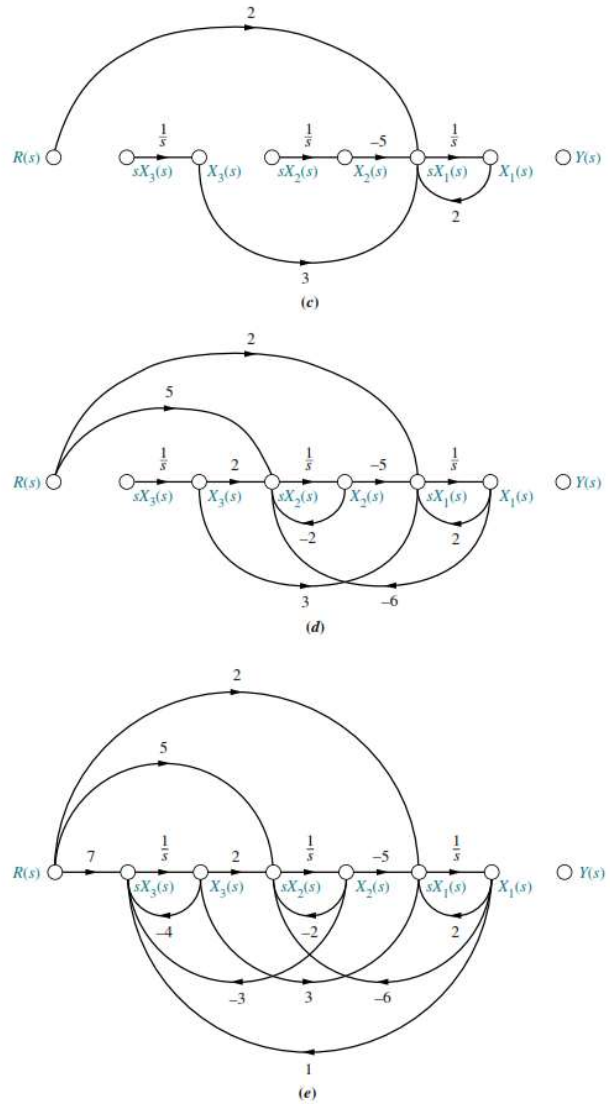

FIGURE 5.22 (*Continued*) **c.** form dx_1/dt; **d.** form dx_2/dt; **e.** form dx_3/dt; (*figure continues*)

Lecture 5: Stability

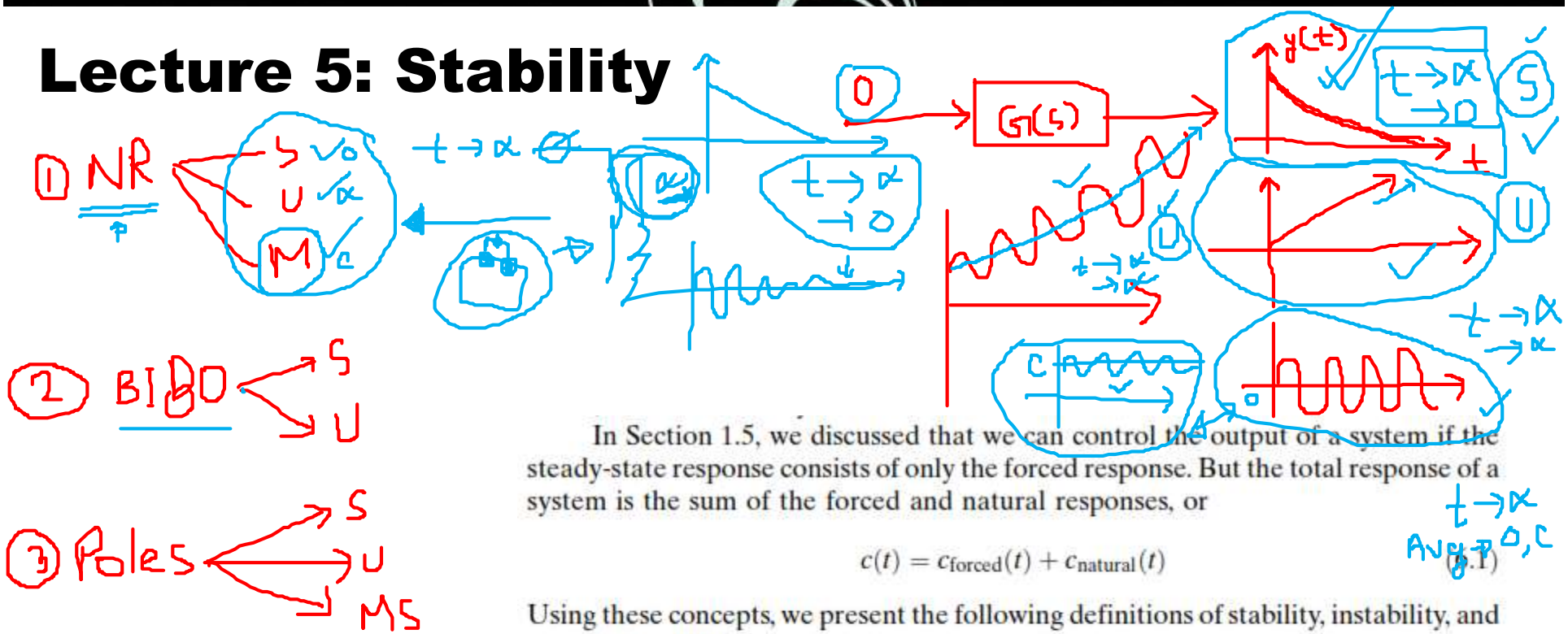

In Section 1.5, we discussed that we can control the output of a system if the steady-state response consists of only the forced response. But the total response of a system is the sum of the forced and natural responses, or

$$c(t) = c_{\text{forced}}(t) + c_{\text{natural}}(t) \tag{5.1}$$

Using these concepts, we present the following definitions of stability, instability, and marginal stability:

A linear, time-invariant system is *stable* if the natural response approaches zero as time approaches infinity.

A linear, time-invariant system is *unstable* if the natural response grows without bound as time approaches infinity.

A linear, time-invariant system is *marginally stable* if the natural response neither decays nor grows but remains constant or oscillates as time approaches infinity.

Thus, the definition of stability implies that only the forced response remains as the natural response approaches zero.

Stable
Unstable
Marginally Stable

Lecture 5: Stability

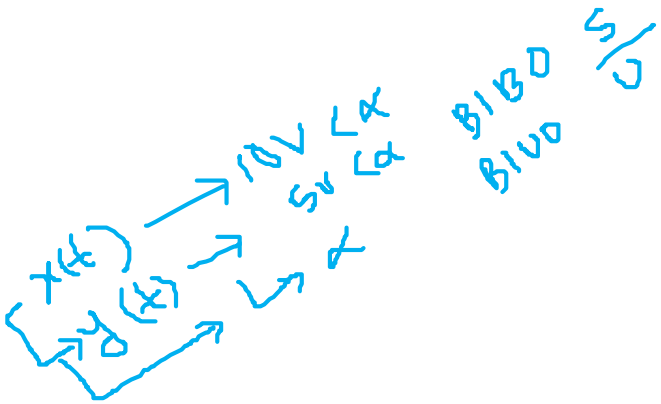

Let us summarize our definitions of stability for linear, time-invariant systems. Using the natural response:

1. A system is stable if the natural response approaches zero as time approaches infinity.
2. A system is unstable if the natural response approaches infinity as time approaches infinity.
3. A system is marginally stable if the natural response neither decays nor grows but remains constant or oscillates.

Using the total response (BIBO):

1. A system is stable if *every* bounded input yields a bounded output.
2. A system is unstable if *any* bounded input yields an unbounded output.

Stable
Unstable

Lecture 5: Stability

Let us summarize our definitions of stability for linear, time-invariant systems. Using the natural response:

1. A system is stable if the natural response approaches zero as time approaches infinity.
2. A system is unstable if the natural response approaches infinity as time approaches infinity.
3. A system is marginally stable if the natural response neither decays nor grows but remains constant or oscillates.

Using the total response (BIBO):

1. A system is stable if *every* bounded input yields a bounded output.
2. A system is unstable if *any* bounded input yields an unbounded output.

Lecture 5: Stability

Poles
Zeros
Complex Plane

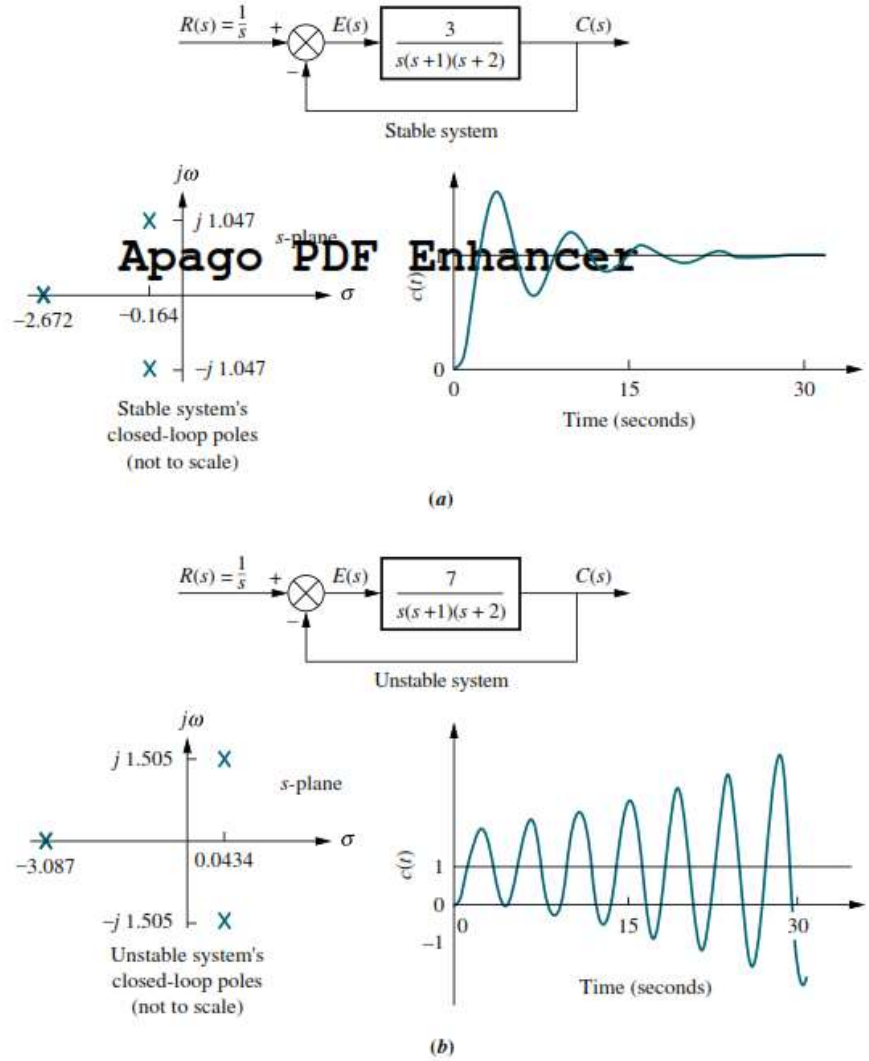

FIGURE 6.1 Closed-loop poles and response:
a. stable system;
b. unstable system

Apago PDF Enhancer

Lecture 5: Stability

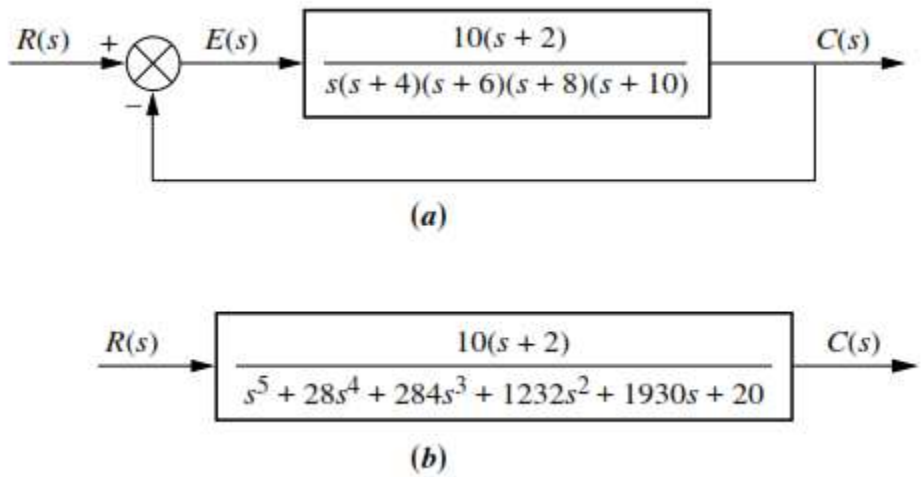

FIGURE 6.2 Common cause of problems in finding closed-loop poles: **a.** original system; **b.** equivalent system

Routh-Hurwitz criterion declares that
the number of roots of the polynomial that are in the right half-plane is equal to the number of sign changes in the first column of the Routh Table.

Lecture 5: Stability

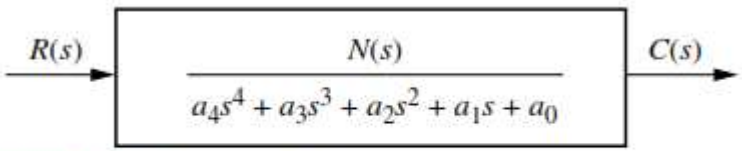

FIGURE 6.3 Equivalent closed-loop transfer function

TABLE 6.1 Initial layout for Routh table

s^4	a_4	a_2	a_0
s^3	a_3	a_1	0
s^2			
s^1			
s^0			

TABLE 6.2 Completed Routh table

s^4	a_4	a_2	a_0
s^3	a_3	a_1	0
s^2	$\dfrac{-\begin{vmatrix} a_4 & a_2 \\ a_3 & a_1 \end{vmatrix}}{a_3} = b_1$	$\dfrac{-\begin{vmatrix} a_4 & a_0 \\ a_3 & 0 \end{vmatrix}}{a_3} = b_2$	$\dfrac{-\begin{vmatrix} a_4 & 0 \\ a_3 & 0 \end{vmatrix}}{a_3} = 0$
s^1	$\dfrac{-\begin{vmatrix} a_3 & a_1 \\ b_1 & b_2 \end{vmatrix}}{b_1} = c_1$	$\dfrac{-\begin{vmatrix} a_3 & 0 \\ b_1 & 0 \end{vmatrix}}{b_1} = 0$	$\dfrac{-\begin{vmatrix} a_3 & 0 \\ b_1 & 0 \end{vmatrix}}{b_1} = 0$
s^0	$\dfrac{-\begin{vmatrix} b_1 & b_2 \\ c_1 & 0 \end{vmatrix}}{c_1} = d_1$	$\dfrac{-\begin{vmatrix} b_1 & 0 \\ c_1 & 0 \end{vmatrix}}{c_1} = 0$	$\dfrac{-\begin{vmatrix} b_1 & 0 \\ c_1 & 0 \end{vmatrix}}{c_1} = 0$

Lecture 5: Stability

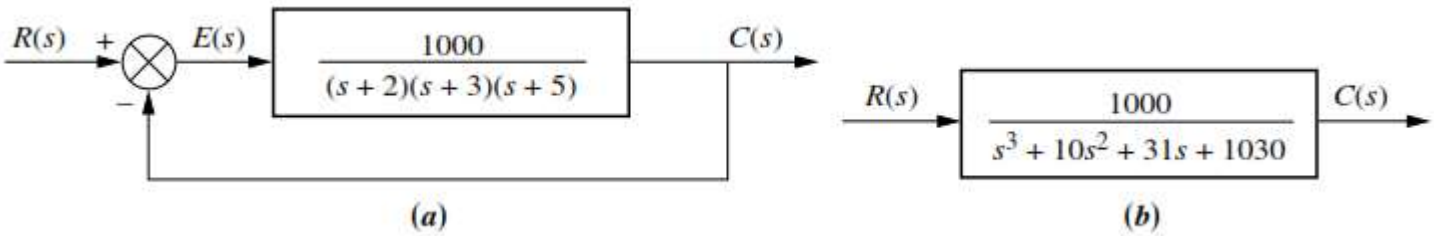

Lecture 5: Stability

PROBLEM: Determine the stability of the closed-loop transfer function

$$T(s) = \frac{10}{s^5 + 2s^4 + 3s^3 + 6s^2 + 5s + 3} \tag{6.2}$$

TABLE 6.4 Completed Routh table for Example 6.2

s^5	1	3	5
s^4	2	6	3
s^3	$\cancel{0}\ \epsilon$	$\frac{7}{2}$	0
s^2	$\frac{6\epsilon - 7}{\epsilon}$	3	0
s^1	$\frac{42\epsilon - 49 - 6\epsilon^2}{12\epsilon - 14}$	0	0
s^0	3	0	0

Lect

Stability via Routh Table with Row of Zeros

PROBLEM: Determine the number of right-half-plane poles in the closed-loop transfer function

$$T(s) = \frac{10}{s^5 + 7s^4 + 6s^3 + 42s^2 + 8s + 56} \tag{6.8}$$

TABLE 6.7 Routh table for Example 6.4

s^5			1			6			8
s^4		$\cancel{7}$	1		$\cancel{42}$	6		$\cancel{56}$	8
s^3	$\cancel{0}$	$\cancel{4}$	1	$\cancel{0}$	$\cancel{12}$	3	$\cancel{0}$	$\cancel{0}$	0
s^2			3			8			0
s^1			$\frac{1}{3}$			0			0
s^0			8			0			0

rocedure. First we return to the row immediately above the row of
orm an auxiliary polynomial, using the entries in that row as coeffic
olynomial will start with the power of s in the label column and co
kipping every other power of s. Thus, the polynomial formed for this e

$$\boxed{P(s) = s^4 + 6s^2 + 8}$$

Next we differentiate the polynomial with respect to s and obtain

$$\frac{dP(s)}{ds} = 4s^3 + 12s + 0$$

Lecture 5: Stability

Even Polynomial
Odd Polynomial

Characteristics of Even polynomial
From mathematics

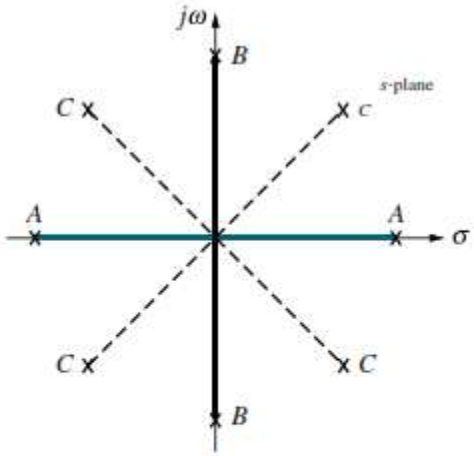

A: Real and symmetrical about the origin
B: Imaginary and symmetrical about the origin
C: Quadrantal and symmetrical about the origin

FIGURE 6.5 Root positions to generate even polynomials: *A*, *B*, *C*, or any combination

* Polynomial that has only even power of s.
* Even polynomial only have roots that are symmetrical about the origin.

1. Symmetrical and real
2. Symmetrical and imaginary
3. Symmetrical and quadrantal

2s2+4=0	s2-4=0
s2+2=0	s2=4
s2=-2	s=+-2
s=+-jsqrt(2)	

Lecture 5: Stability

Pole Distribution via Routh Table with Row of Zeros

PROBLEM: For the transfer function

$$T(s) = \frac{20}{s^8 + s^7 + 12s^6 + 22s^5 + 39s^4 + 59s^3 + 48s^2 + 38s + 20} \qquad (6.11)$$

tell how many poles are in the right half-plane, in the left half-plane, and on the $j\omega$-axis.

$$P(s) = s^4 + 3s^2 + 2 \qquad \frac{dP(s)}{ds} = 4s^3 + 6s + 0$$

TABLE 6.8 Routh table for Example 6.5

s^8				1				12				39			48	20
s^7				1				22				59			38	0
s^6			$-\cancel{10}$	-1			$-\cancel{20}$	-2			$\cancel{10}$	1		$\cancel{20}$	2	0
s^5			$\cancel{20}$	1			$\cancel{60}$	3			$\cancel{40}$	2			0	0
s^4				1				3				2			0	0
s^3	$\cancel{0}$	$\cancel{4}$		2	$\cancel{0}$	$\cancel{6}$		3	$\cancel{0}$	$\cancel{0}$		0			0	0
s^2		$\frac{3}{\cancel{2}}$		3		$\cancel{2}$		4				0			0	0
s^1				$\frac{1}{3}$				0				0			0	0
s^0				4				0				0			0	0

Lecture 5: Stability

TABLE 6.9 Summary of pole locations for Example 6.5

	Polynomial		
Location	**Even (fourth-order)**	**Other (fourth-order)**	**Total (eighth-order)**
Right half-plane	0	2	2
Left half-plane	0	2	2
$j\omega$	4	0	4

The remaining roots of the total polynomial are evaluated from the s^8 row down to the s^4 row. We notice two sign changes: one from the s^7 row to the s^6 row and the other from the s^6 row to the s^5 row. Thus, the other polynomial must have two roots in the right half-plane. These results are included in Table 6.9 under "Other". The final tally is the sum of roots from each component, the even polynomial and the other polynomial, as shown under "Total" in Table 6.9. Thus, the system has two poles in the right half-plane, two poles in the left half-plane, and four poles on the $j\omega$-axis; it is unstable because of the right–half-plane poles.

$$P(s) = s^4 + 3s^2 + 2 \tag{6.12}$$

TABLE 6.8 Routh table for Example 6.5

s^8	1	12	39	48	20
s^7	1	22	59	38	0
s^6	$-\cancel{10}-1$	$-\cancel{20}-2$	$\cancel{10}\ 1$	$\cancel{20}\ 2$	0
s^5	$\cancel{20}\ 1$	$\cancel{60}\ 3$	$\cancel{40}\ 2$	0	0
s^4	1	3	2	0	0
s^3	$\cancel{0}\ \cancel{4}\ 2$	$\cancel{0}\ \cancel{6}\ 3$	$\cancel{0}\ \cancel{0}\ 0$	0	0
s^2	$\cancel{\frac{3}{2}}\ 3$	$\cancel{2}\ 4$	0	0	0
s^1	$\frac{1}{3}$	0	0	0	0
s^0	4	0	0	0	0

Lecture 5: Stability

Stability Design via Routh-Hurwitz

PROBLEM: Find the range of gain, K, for the system of Figure 6.10 that will cause the system to be stable, unstable, and marginally stable. Assume $K > 0$.

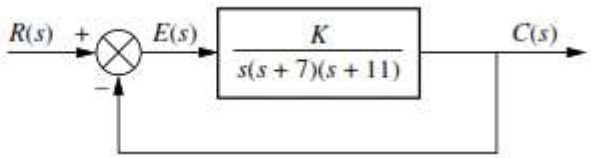

FIGURE 6.10 Feedback control system for Example 6.9

First find the closed-loop transfer function as

$$T(s) = \frac{K}{s^3 + 18s^2 + 77s + K}$$

Next form the Routh table shown as Table 6.15.

TABLE 6.15 Routh table for Example 6.9

s^3	1	77
s^2	18	K
s^1	$\frac{1386 - K}{18}$	
s^0	K	

Stability in State Space

PROBLEM: Given the system

$$\dot{\mathbf{x}} = \begin{bmatrix} 0 & 3 & 1 \\ 2 & 8 & 1 \\ -10 & -5 & -2 \end{bmatrix}\mathbf{x} + \begin{bmatrix} 10 \\ 0 \\ 0 \end{bmatrix} u \tag{6.33a}$$

$$y = [1 \quad 0 \quad 0]\mathbf{x} \tag{6.33b}$$

find out how many poles are in the left half-plane, in the right half-plane, and on the $j\omega$-axis.

$$T(s) = \frac{Y(s)}{U(s)} = \mathbf{C}(s\mathbf{I} - \mathbf{A})^{-1}\mathbf{B} + \mathbf{D}$$

SOLUTION: First form $(s\mathbf{I} - \mathbf{A})$:

$$(s\mathbf{I} - \mathbf{A}) = \begin{bmatrix} s & 0 & 0 \\ 0 & s & 0 \\ 0 & 0 & s \end{bmatrix} - \begin{bmatrix} 0 & 3 & 1 \\ 2 & 8 & 1 \\ -10 & -5 & -2 \end{bmatrix} = \begin{bmatrix} s & -3 & -1 \\ -2 & s-8 & -1 \\ 10 & 5 & s+2 \end{bmatrix} \tag{6.34}$$

Now find the $\det(s\mathbf{I} - \mathbf{A})$:

$$\det(s\mathbf{I} - \mathbf{A}) = s^3 - 6s^2 - 7s - 52 \tag{6.35}$$

$$\det(s\mathbf{I} - \mathbf{A}) = s^3 - 6s^2 - 7s - 52$$

Using this polynomial, form the Routh table of Table 6.18.

TABLE 6.18 Routh table for Example 6.11

s^3	1	-7
s^2	$\cancel{-6}\ -3$	$\cancel{-52}\ -26$
s^1	$\cancel{\frac{47}{3}}\ -1$	$\cancel{0}\ 0$
s^0	-26	