DEPARTMENT OF ELECTRICAL & ELECTRONIC ENGINEERING

Experiment No. : 2

Experiment Name: Mathematical Modeling of a System using MATLAB

OBJECTIVES

1. **Understanding the basic principle of Partial Fraction Expansion (PFE)**
2. **Determining of PFE in different condition.**
3. **Using different electrical circuit calculate PFE both theoretically & MATLAB**

PRELAB WORK:

1. **Read this laboratory tutorial carefully before coming to the laboratory class, so that you know what is required.**
2. Try to follow the lectures of EEE 4701.
3. Familiarize yourself with relevant MATLAB functions and codes necessary for this experiment.

Objective-1: **Understanding the basic principle of Partial Fraction Expansion (PFE)**

Introduction

When trying to find the inverse Laplace transform (or inverse z transform) it is helpful to be able to break a complicated ratio of two polynomials into forms that are on the Laplace Transform (or z transform) table. We will illustrate here using Laplace transforms. This can be done using the method of "partial fraction expansion" (PFE), which is the reverse of finding a common denominator and combining fractions. It is possible to do PFE by hand or it is possible to use MATLAB to help. We will illustrate hand computation only for the simplest case when there are no repeated roots and the order of the numerator polynomial is strictly less than the order of the denominator polynomial, [1].

First we will show **why** the "by-hand" method works and then we will show **how** one actually does it. Then we will illustrate how to use MATLAB to do PFE.

Why It Works

For that case, suppose we have a LT ***Y(s)*** that we wish to invert but it is not on our table. Suppose that the denominator of Y(s) can be factored as

$$Y(s) = \frac{N(s)}{D(s)} = \frac{N(s)}{d_N s^N + d_{N-1}s^{N-1} + \cdots + d_1 s + d_0}$$

$$= \frac{N(s)}{d_N (s-p_1)(s-p_2)\cdots(s-p_N)} \qquad Y(s) = \frac{N(s)}{D(s)} = \frac{}{d_N S^N}$$

For the case we are considering this can be expanded into the form

$$Y(s) = \frac{r_1}{(s-p_1)} + \frac{r_2}{(s-p_2)} + \cdots + \frac{r_N}{(s-p_N)}$$

where the r_i are numbers called the "residues" of the expansion.

How to Do It

Illustrate with an example. Find the inverse LT of

$$Y(s) = \frac{3s-1}{s^2+3s+2}$$

First we have to factor the denominator. Using the quadratic formula we get the roots and the write the factored form as

$$Y(s) = \frac{3s-1}{(s+2)(s+1)}$$

Using PFE we get r_1 =7 & r_2 =-4

Partial Fraction Expansion via MATLAB

The **"residue" function of MATLAB can be used to compute the partial fraction expansion (PFE)** of a ratio of two polynomials.

This can be used for **Laplace transforms** or **Z transforms**, although we will illustrate it with Laplace transforms here.

The "residue" command gives three pieces of information:

1. the residues are given in output vector r,
2. the poles are given in output vector p,
3. the so-called direct terms are given in output vector k.

When the order of the numerator polynomial:

1. is less than the order of the denominator polynomial there will be no direct terms.
2. equals the order of the denominator there will be one direct term;.
3. is one greater than the order of the denominator there will be two direct terms.
4. Etc.

That is, when the order of the numerator is p greater than the order of the denominator (with p≥0) there will be p+1 direct term.

The "residue" command requires two input vectors:

1. one holding the coefficients of the numerator and
2. one holding the coefficients of the numerator

The right-most element in these vectors corresponds to the $\mathbf{s^0}$ coefficient, the next element to the left is the $\mathbf{s^1}$ coefficient, etc., until you reach the highest power; if a power is not present it has a zero coefficient.

Objective-2: Determining of PFE in different condition.
It is easiest to explain how to use "residue" by giving examples

Ex. #1: **No Direct Terms**, **No Repeated Roots**, **No Complex Roots**

$$Y(s) = \frac{3s - 1}{s^2 + 3s + 2}$$

In this case there will be no direct terms because the numerator order is lower than the denominator order.

The **numerator vector** is [3 −1]

The **denominator vector** is [1 3 2].

The **command and its result** is:

» [r,p,k]=residue([3 -1],[1 3 2])

Which gives r=7,-4 p=-2,-1 k=[]

Note that k is empty (denoted by **[]**) showing that there are no direct terms.

The **numbers in r are the residues** – they are the numbers that go in the numerator of each term in the expansion.

The **numbers in p are the poles** – they are the numbers subtracted from s to form the denominators of the terms.

We have a **pole at s = -2 with a residue of 7** and….
…a **pole at s = -1 with a residue of –4**; thus:

$$Y(s) = \frac{3s-1}{s^2+3s+2} = \frac{7}{s+2} + \frac{-4}{s+1}$$

and then using the Laplace Transform Table for each of the two terms in the expansion we get:

$$y(t) = 7e^{-2t}u(t) - 4e^{-t}u(t)$$

Ex. #2: **One Direct Term**, **No Repeated Roots**, **No Complex Roots**

$$Y(s) = \frac{2s^2+3s-1}{s^2+3s+2}$$

» [r,p,k]=residue([2 3 -1],[1 3 2])

Which gives r=-1,-2 p=-2,-1 k=[2]

Thus, we have: **a pole at**: -2 w/ residue -1
a pole at: -1 w/ residue -2;

…. But in this case we **also have a single direct term of 2**, which just adds a term of 2 to the expansion:

$$Y(s) = \frac{2s^2+3s-1}{s^2+3s+2} = \frac{-1}{s+2} + \frac{-2}{s+1} + 2$$

and then using the Laplace Transform Table for each of the three terms in the expansion we get:

$$y(t) = -e^{-2t}u(t) - 2e^{-t}u(t) + 2\delta(t)$$

Lab Task-1

Use MATLAB to generate the partial-fraction expansion of the following function:
ID=last three digit of your ID

$$G(s) = \frac{10^3(S+ID)(S+ID+10)}{s(S+30)(S+ID+5)(S^2+3S+30)(S^2+5S+ID+15)}$$

Hints: Use MATLAB help to look up for such function **numg, deng, zp2tf,tf(numg,deng).**

Objective-3: Using different electrical circuit to calculate PFE both theoretically & MATLAB

Let's have a look on example 2.10 of our course referred book.

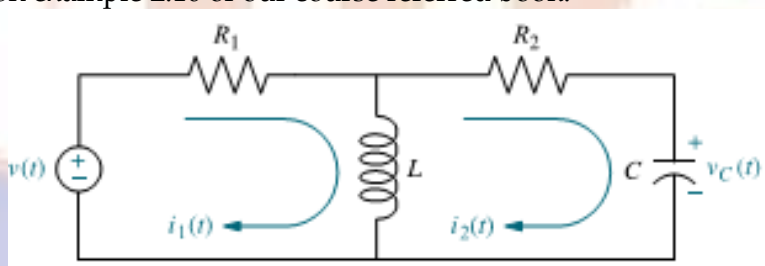

Using loop 1 & loop 2 we get,

$$R_1I_1(s) + LsI_1(s) - LsI_2(s) = V(s)$$

&

$$LsI_2(s) + R_2I_2(s) + \frac{1}{Cs}I_2(s) - LsI_1(s) = 0$$

And further calculation gives

$$G(s) = \frac{I_2(s)}{V(s)} = \frac{Ls}{\Delta} = \frac{LCs^2}{(R_1+R_2)LCs^2 + (R_1R_2C + L)s + R_1}$$

If we place numerical values here this will be look like normal transfer function. And to calculate roots, pole and output vector we will use objective -2 procedures.

Lab task-2

Below here there is an electrical network. Calculate the transfer function theoretically and show the detail procedure. Now, when you got the transfer function add R1=(2Ω+ID), C1=(1F+ID)F & L=(2H+ID)H. After that, use PFE procedure to evaluate r,p,k. [ID= last three digit of your id]

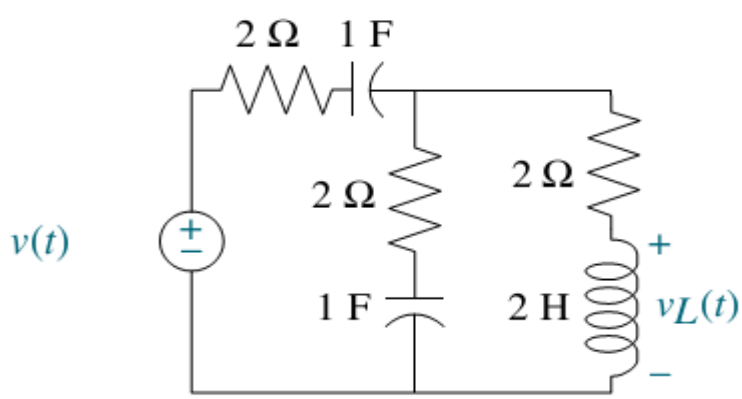

Report preparation

Please prepare your report with yourself & don't try to copy. Report should cover the following Topics:

1. Objective
2. Apparatus/Utility software:
3. Description of Task:
4. MATLAB code & Result:
5. Analysis of Each output:
6. Discussion:

References:

1. http://www.ws.binghamton.edu/fowler/fowler%20personal%20page/EE301_files/Notes_29b%20Sect%208-3%20Partial%20Fraction%20Expansion.pdf