International Islamic University Chittagong (IIUC)
Department of Electrical & Electronic Engineering
Course Title –Power Electronics Sessional
Course No.-EEE-4706

Experiment no.01: To study the operation of Half-wave Rectifier with R and R-L load (With and without Freewheeling Diode).

OBJECTIVE:

- To become familiar with Half- wave rectifier with R-L load.
- To observe the operation of half-wave rectifier with different inductive load.
- To observe the operation of freewheeling diode.

THEORY:

Half-wave Rectifier with R load:

Single phase half wave rectifier is shown in fig-1. During the positive half cycle of the input voltage, diode D conducts and the input voltage appears across the load. During the negative half cycle of the input voltage the diode is in a blocking condition and the output voltage is zero. The waveforms for the input voltage and the output voltage are shown in fig- 1.1.

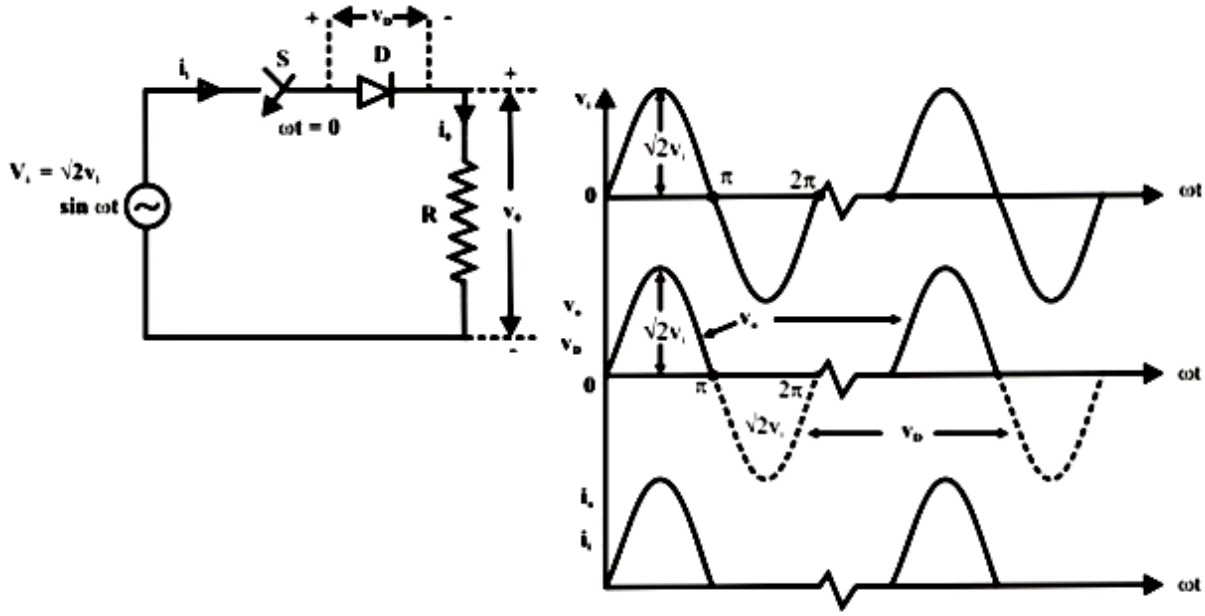

Fig-1.1: Half wave rectifier with R load and input output waveforms

Half-wave Rectifier with R-L load:

A simple half-wave diode rectifying circuit(R-L load) and input output waveforms are shown in fig-1.2. Load current commences when the supply voltage goes positive at ωt = 0. It will be seen that load current flows not only during the positive half of the ac supply voltage but also during a portion of the negative supply voltage. The load inductor stored energy maintains the load current and the inductor's terminal voltage reverses and is able to overcome the negative supply and keep the diode forward - biased and conducting. This current continues until all the inductor energy, ½ Li^2, is released (i = 0) at the current extinction angle (or cut-off angle), ω t = ß . Voltage across the inductor is shown in fig-1.3.

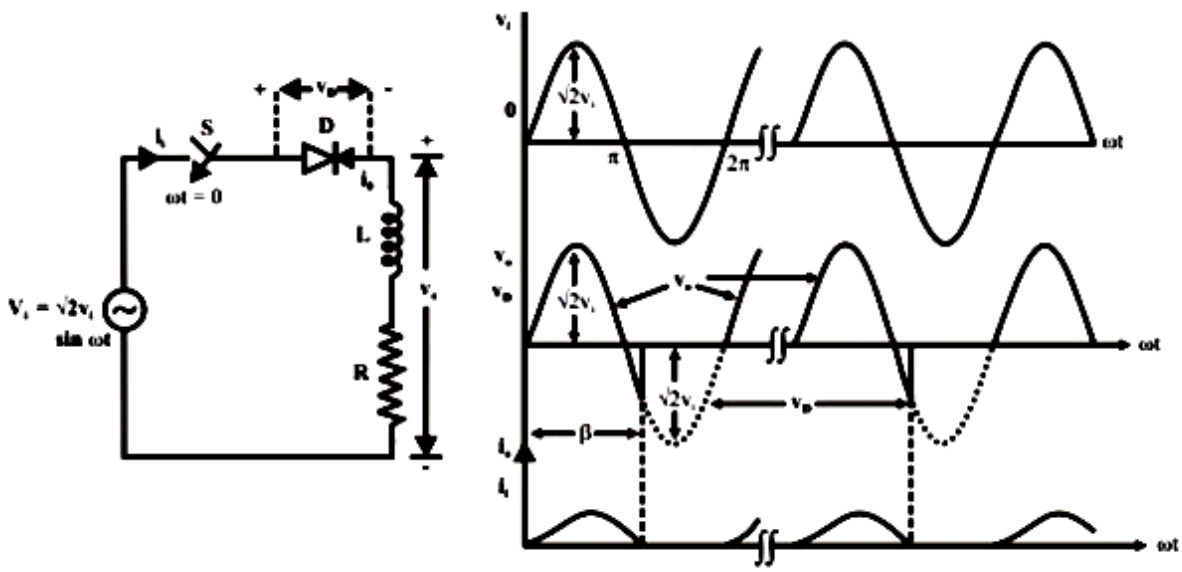

Fig-1.2: Half-wave rectifier with R-L load and input output waveforms.

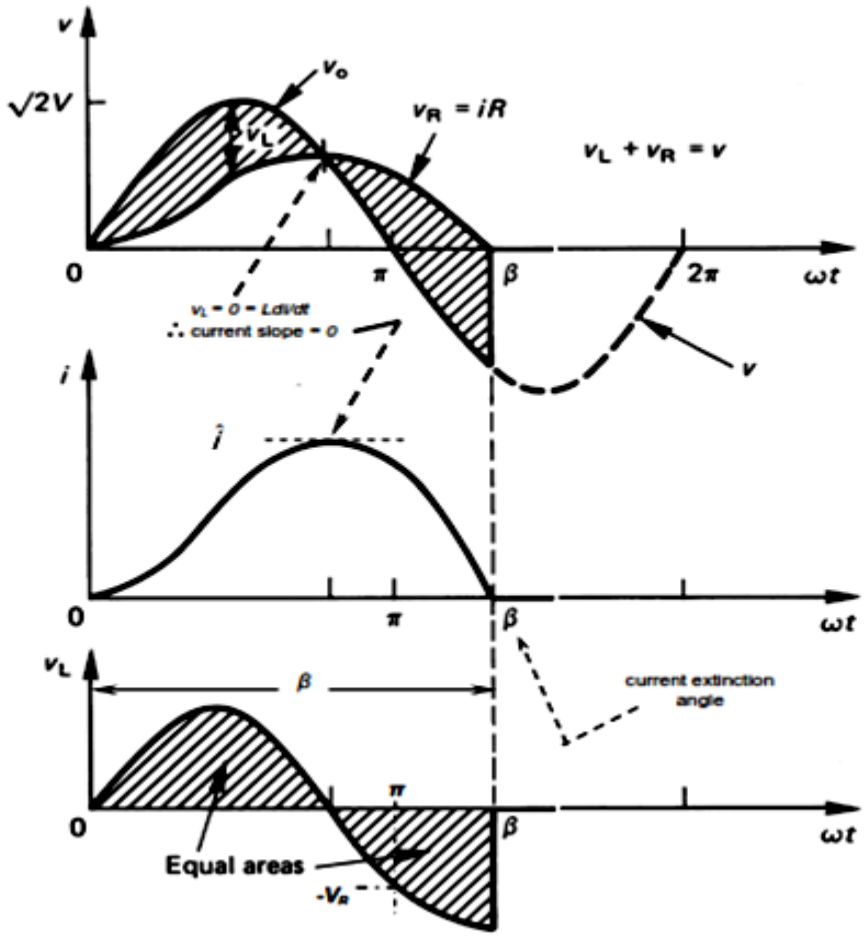

Fig-1.3: Voltage across the inductor.

Half-wave Rectifier with R-L load and Freewheeling Diode:

Due to inductive load, the conduction period of diode D will extend beyond 180^0 until the current becomes zero. Therefore a negative portion arises at the output and average output voltage decreased. By adding a freewheeling diode D_m as shown in fig 1.4, the average voltage can be increased. The effect of this diode is to prevent a negative voltage appearing across the load.

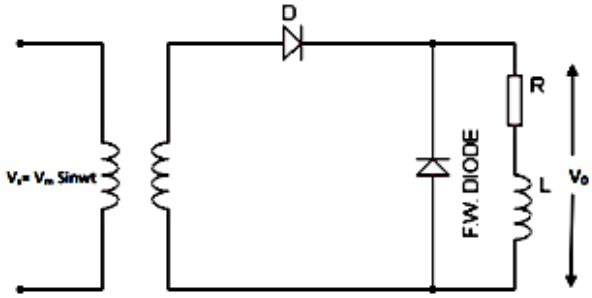

Fig-1.4: Half wave rectifier with R-L load and freewheeling diode.

EQUIPMENT REQUIRED

1. Mobile Workstation
2. Resistive Load
3. DC voltmeter/Ammeter
4. Multi-meter
5. Power Supply
6. Enclosure/Power Supply
7. Power Diodes
8. Connection Leads & Accessories
9. Current/Voltage Isolator
10. Oscilloscope

Experimental circuit Diagram:

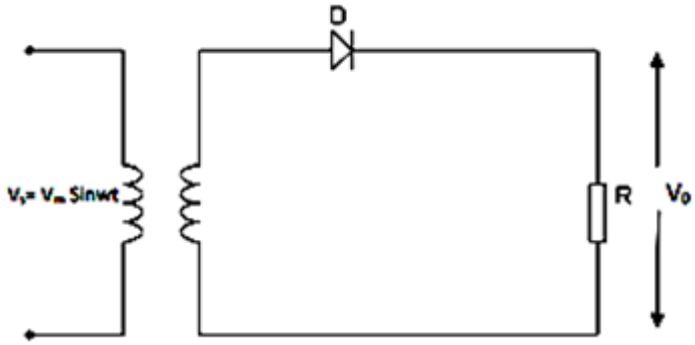

Fig-1.5(a): Half-wave Rectifier with R load

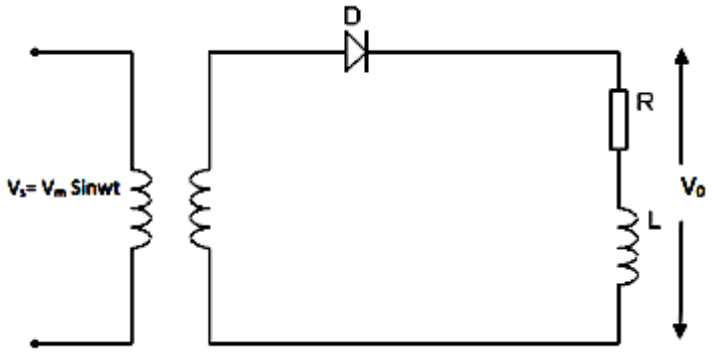

Fig-1.5(b): Half-wave Rectifier with R-L load.

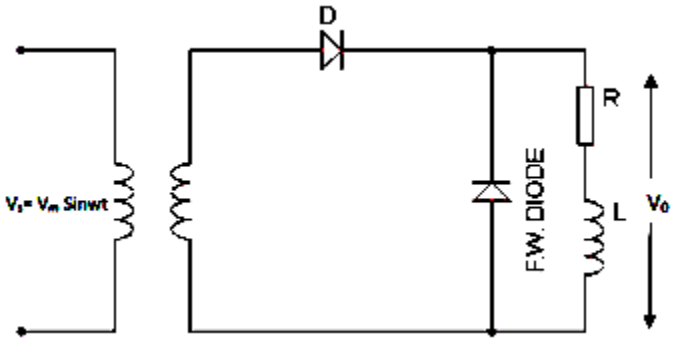

Fig-1.5(c): Half-wave Rectifier with R-L load and freewheeling diode.

PROCEDURE:

1. Install the Enclosure Power Supply, the Resistive Load, the Power Diodes modules current voltage Isolator in the Mobile Workstation.
2. Set up the circuit shown in Figure -1.5(a). And connect resistive load according to data table.
3. Connect oscilloscope to the output via current voltage isolator.
4. Connect Multi-meter and DC Ammeter to measure output dc voltage and current.
5. Turn on the power supply and take the reading according to data table.
6. Set up the circuit shown in Figure -1.5(b) and connect load according to data table. Then vary the load according to data table and take reading.
7. Set up the circuit shown in Figure -1.5(c) (Add a freewheeling diode) and connect load according to data table. Then vary the load according to data table and take reading.

Experimental Data:

V_s or V_{in} = 200V [rms].

No. Of observation	LOAD (R and R-L)		V_{in} and V_0 (wave shape)	Output voltage V_0 and current i_0 (Wave shape)	Output voltage V_0[volt] (Measured)	Output current i_0(A) (Measured)	Voltage across diode ,V_d (Wave shape)
1	With Out D_m	R=1200 ohm					
2		R=1200 ohm L=3.8H					
3		R=1200 ohm L=7.6H					
4		R=1200 ohm L=15.3H					
5		R=1200 ohm L=30.6H					
6	With D_m	R=2400 ohm L=15.3H					
7		R=2400 ohm L=30.6 H					
8		R=1200 ohm L=45.9 H					

Review Questions:

1. Why is the conduction angle greater with an inductive load than with a purely resistive load'?

2. What effect does the inductive load have on the average output voltage and current?
3. What effect does the freewheeling diode have on the operation of the circuit?

International Islamic University Chittagong (IIUC)
Department of Electrical & Electronic Engineering
Course Title –Power Electronics Sessional
Course No.-EEE-4706

Experiment no 2: To study the operation of Full-wave Rectifier with R and R-L load.

OBJECTIVE:

- To become familiar with Full- Wave Bridge rectifier with R and R-L load.
- To observe the operation of Full-wave rectifier with different inductive load.

THEORY:

Full-wave Bridge Rectifier with R load:

Full wave Bridge rectifier with R load is shown in fig-2.1(a). During positive half-cycle of the input voltage the power is supplied to the load through diode D1 and D2. During negative half-cycle, D3 and D4 conduct. The waveform for the output voltage is shown in fig 2.1(b).

The average output voltage is $V_{dc} = 2V_m / \pi = 0.6366V_m$. ..... (2.1)

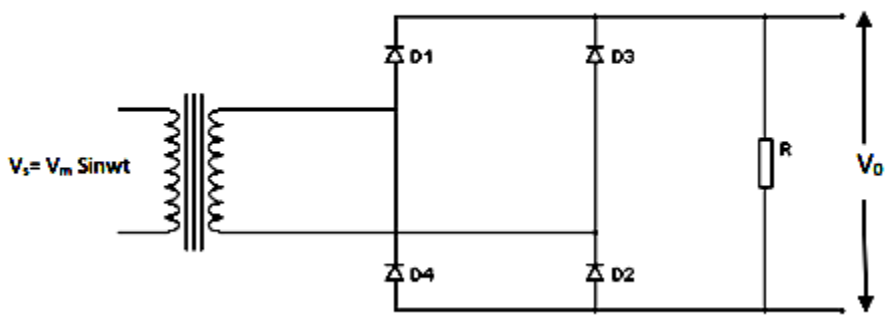

Fig-2.1(a): Full wave Bridge rectifier with R load.

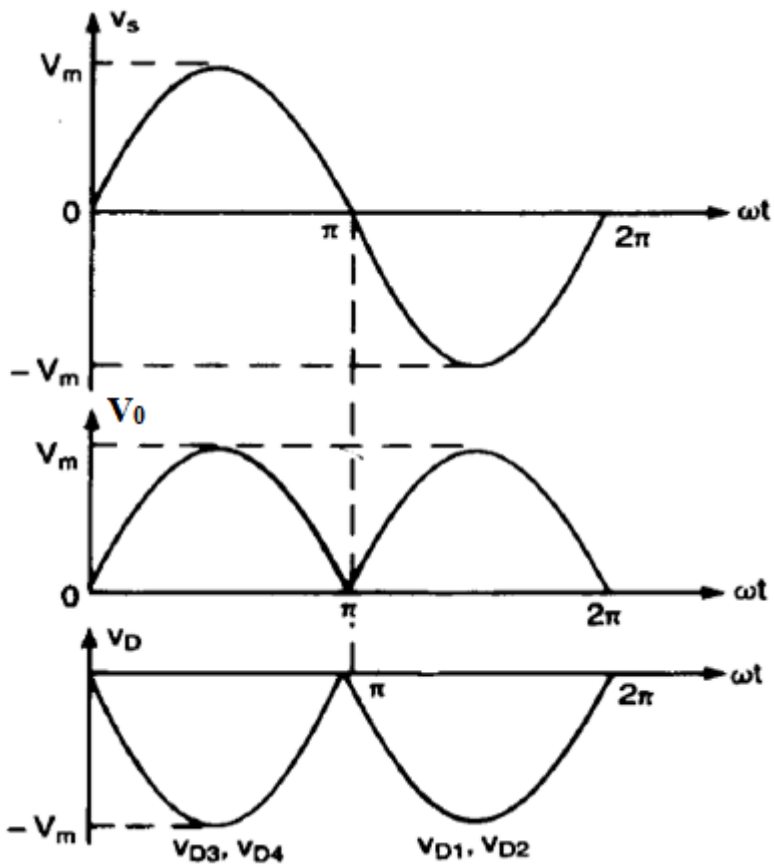

Fig-2.1(b): Waveforms of full wave Bridge rectifier with R load.

Full-wave Bridge Rectifier with R-L load:

With resistive load, load current is identical in shape to the output voltage. But in inductive load, load current depends on the values of load resistance R and load inductance L. Circuit diagram and waveforms are shown in fig-2.2(a) and 2.2(b) respectively.

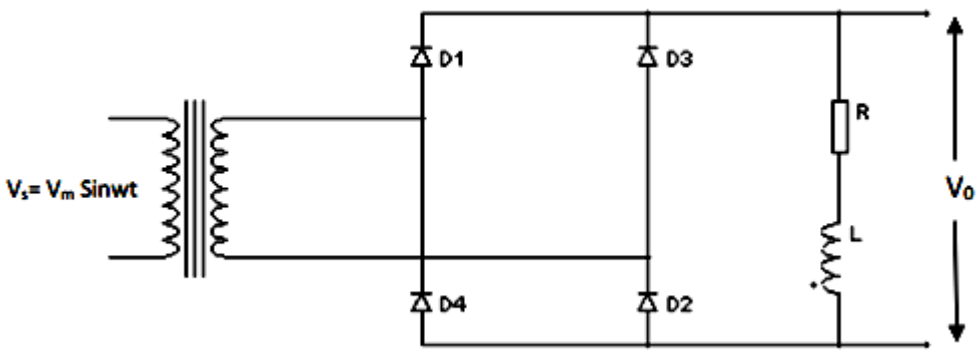

Fig-2.2(a): Full-wave Bridge Rectifier with R-L load

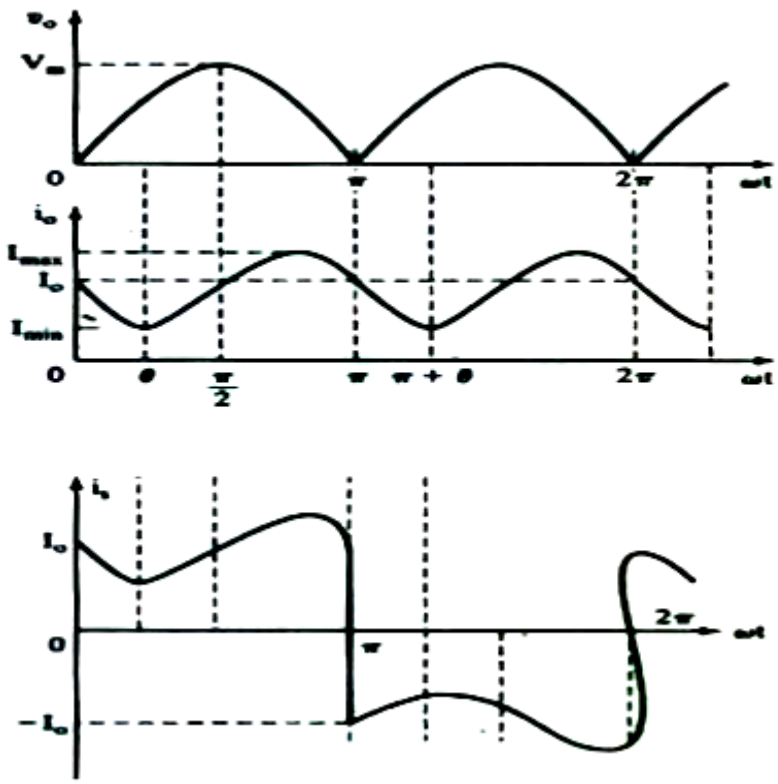

Fig-2.2(b): Waveforms of full-wave Bridge Rectifier with R-L load

EQUIPMENT REQUIRED

1. Mobile Workstation.
2. Resistive Load.
3. Inductive load.
4. DC voltmeter/Ammeter
5. Multi-meter
6. Power Supply
7. Enclosure/Power Supply
8. Power Diodes
9. Connection Leads & Accessories
10. Current/Voltage Isolator
11. Oscilloscope

PROCEDURE:

1. Install the Enclosure Power Supply, the Resistive Load, the Power Diodes modules current voltage Isolator in the Mobile Workstation.
2. Set up the circuit shown in Figure -2.1(a). And connect resistive load according to data table.
3. Connect oscilloscope to the output via current voltage isolator.
4. Connect Multi-meter to measure output voltage.
5. Turn on the power supply and take the reading according to data table-2.1.
6. Set up the circuit shown in Figure -2.2(a) and connect R-L load according to data table. Turn on the power supply and take the reading according to data table-2.2.
7. Then vary the load according to data table and take reading.

Experimental Data:

Table-2.1: Data for Full wave rectifier with R load:

V_s or V_{in} =200V (rms).

No. Of obs.	Load R (ohm)	Input voltage, V_{in} and Output voltage V_0 (wave shape)	Output voltage V_0 (measured)	I_0 and I_s (wave shape)
1	1200			
2	2400			
3	3600			

Table-2.2: Data for Full wave rectifier with R-L load:

V_s or V_{in} =200V (rms).

No. Of obs.	Load [R(Ω) and L (H)]	V_{in} and V_0(wave shape)	Output voltage V_0(measured)	I_0 and I_s (wave shape)
1	R = 1200 and L= 3.8			
2	R = 1200 and L= 7.6			
3	R = 1200 and L= 15.3			
4	R = 1200 and L= 30.6			
5	R = 1200 and L= 45.9			

Review Questions:

1. In half-wave rectifier with inductive load, the output wave shape contains a negative portion. To overcome the negative portion freewheeling diode is used. But in full-wave rectifier with R-L load, no negative portion arises at the output- Why? Explain.
2. Explain the effect on output current and source current due to increasing inductive load.

International Islamic University Chittagong (IIUC)
Department of Electrical & Electronic Engineering
Course Title –Power Electronics Sessional
Course No.-EEE-4706

Experiment no.3: To study the operation of Single Phase Half-wave Controlled Rectifier.

OBJECTIVE

• To become familiar with the principles of controlled rectifier.
• To observe the operation of half-wave phase control circuits.

THEORY

Half-wave phase control: controlled rectifier with R load:

Figure-3.1 shows a half-wave phase control circuit using a single thyristor. This is a controlled rectifier with resistive load. When the load is purely resistive, the waveforms of this circuit are shown in Figure 3.2.
The output voltage can be calculated from $V_{dc} = V_m /2\pi \ (1+ \cos\alpha)$. .....(3.1)
Where α is the firing Angle of the thyristor.

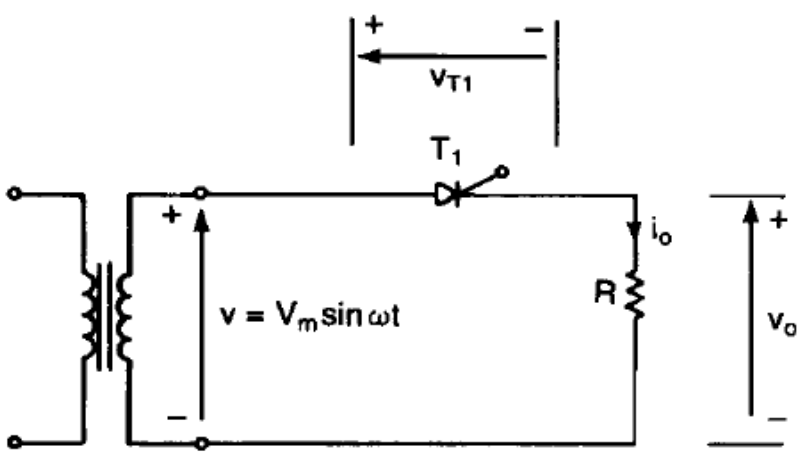

Figure-3.1: Half wave controlled rectifier circuit with R load.

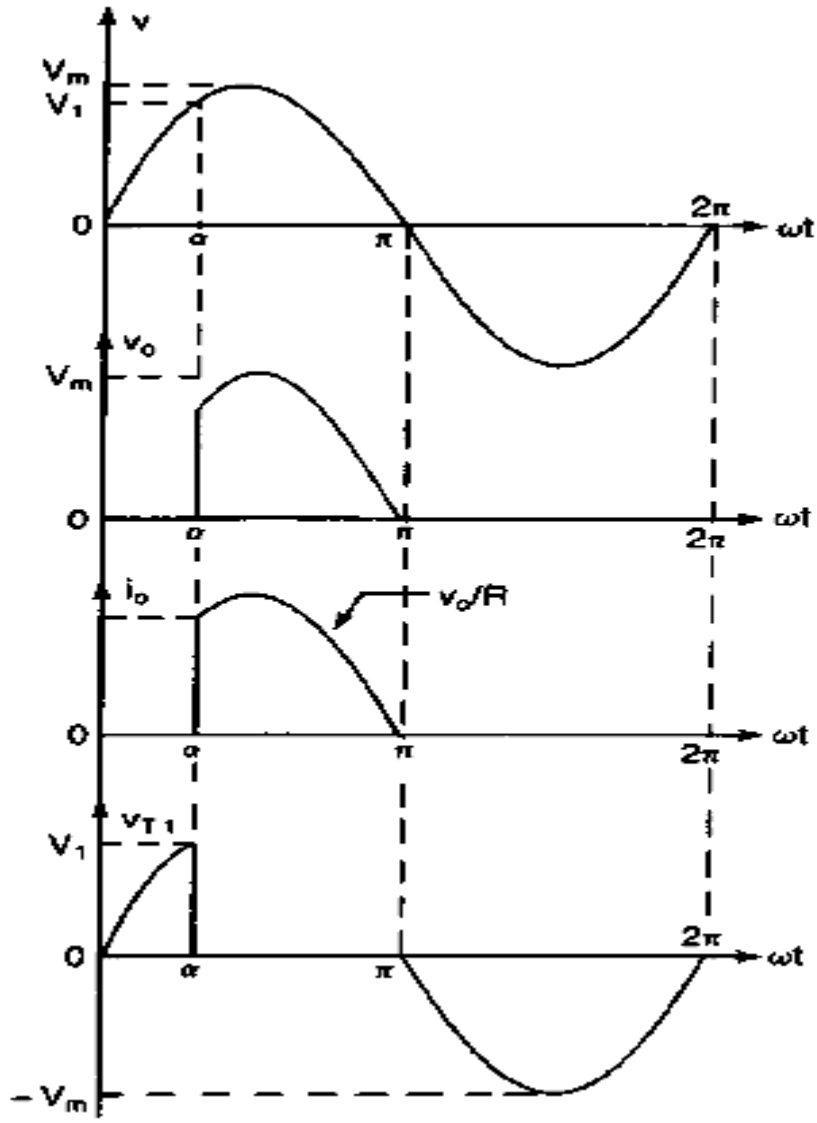

Fig-3.2: Waveforms of half wave controlled rectifier circuit with R load.

Half wave controlled rectifier circuit with R-L load:

Fig-3.3 shows half wave controlled rectifier circuit with R-L load. When the load is inductive, the output voltage can be negative for part of the cycle, as shown in Fig- 3.4.This is because inductor stores energy in its magnetic field for part of the cycle, then gradually releases this energy. Current continues to flow, and the thyristors continue to conduct, until all the stored energy is released. Since this occurs some time alter the ac source voltage has passed through zero, the output voltage becomes negative for part of the cycle.

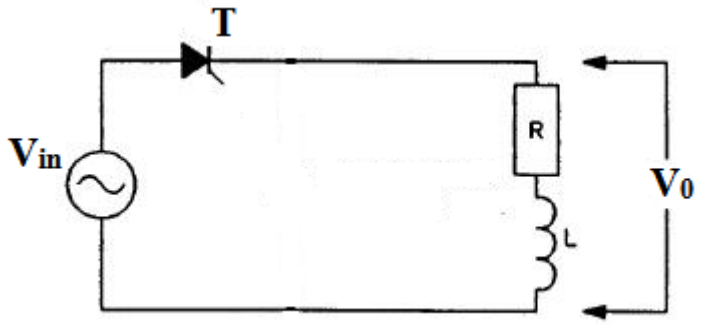

Fig-3.3: Half wave controlled rectifier circuit with R-L load.

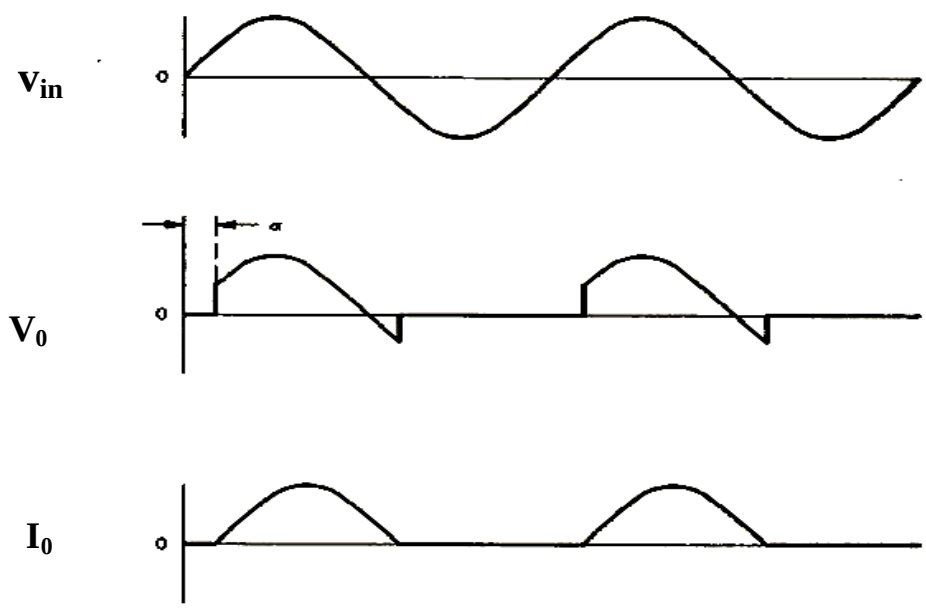

Fig-3.4: Waveforms for Half-wave controlled rectifier with R-L load.

The negative part of the output voltage waveform reduces the average output voltage V_0. To prevent the output voltage from going negative, a free-wheeling diode can be place in the circuit as shown in Fig-3.5. When the output voltage begins to go negative, the freewheeling diode begins to conduct. This maintains the output voltage at approximately zero while the energy stored in the inductor is being released. The output voltage waveform is the same as for a purely resistive load (Fig-3.2), and the average output voltage is therefore greater than it would be without the free-wheeling diode.

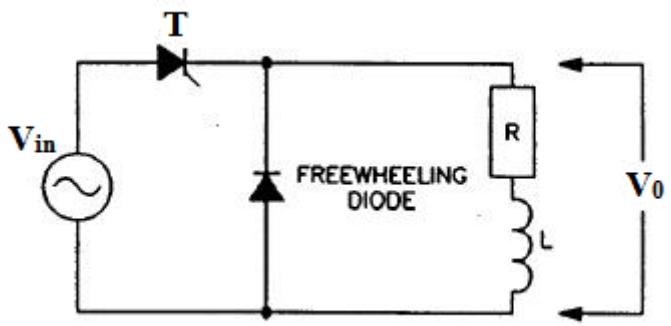

Figure-3.5: Half-wave controlled rectifier circuit with free-wheeling diode.

EQUIPMENT REQUIRED

1. Mobile Workstation.
2. Resistive Load.
3. DC voltmeter/Ammeter.
4. AC Voltmeter.
5. Power Supply.
6. Enclosure/Power Supply.
7. Power Thyristor.
8. Power Diodes.
9. Connection Leads & Accessories.
10. Thyristor Firing Unit.
11. Current/Voltage Isolator.
12. Oscilloscope.

PROCEDURE

1. Install the Power Supply, the Enclosure / Power Supply, the Resistive Load, the Smoothing Inductors, the DC Voltmeter/Ammeter, the AC Voltmeterthe Power Thyristors, and the Power Diodes modules in the Mobile Workstation.
2. Install the Thyristor Firing Unit and the Current/Voltage isolators in the Enclosure / Power Supply.
3. On the Power Supply, set the 24-V ac power switch to the 1 (ON) position.
4. Make sure that the toggle switches on the Power Thyristors and the Resistive Load modules are all set to the O (open) position.
5. Set up the circuit shown in Figure 3.1 and
6. Take the reading according to data table-3.1.
7. Set up the circuit shown in Figure 3.3 and
8. Take the reading according to data table-3.2.
9. Set up the circuit shown in Figure 3.5 and
10. Take reading according to rest of the data table-3.2.

Experimental Data:

Table-3.1: Data for controlled rectifier with R load:

V_{in} =200V [rms], R= 1200Ω.

No. Of obs.	Firing Angle α [degree]	V_{in} and V_0 (wave shape)	V_0 and V_T (wave shape)	Output voltage V_0 (measured)	Output voltage V_0 (calculated)	V_0 and I_0 (wave shape)
1	0					
2	30					
3	60					
4	90					
5	120					
6	150					
7	180					

Table-3.2: Data for controlled rectifier with R-L load:

V_{in} =200V [rms], R= 1200Ω, L= 15.3H.

No. Of obs.	Firing Angle α [degree]	V_{in} and V_0 (wave shape)	V_0 and V_T (wave shape)	Output voltage V_0 (measured)	V_0(measured) After applying D_m.	V_0 and V_T (wave shape) After applying D_m.
1	0					
2	30					
3	60					
4	90					
5	120					
6	150					
7	180					

Review Questions:

1. Why is the conduction angle greater with an inductive load than with a purely resistive load'?
2. What effect does the inductive load have on the average output voltage and current?
3. What is the difference between this rectifier circuit and the half-wave rectifier circuit seen in Experiment 1'?
4. What effect does the freewheeling diode have on the operation of the circuit?

International Islamic University Chittagong (IIUC)
Department of Electrical & Electronic Engineering
Course Title –Power Electronics Sessional
Course No.-EEE-4706

Experiment no.04: To study the operation of Single Phase bridge controlled rectifier. (Full converter and Semi-converter)

OBJECTIVE

- To demonstrate the operation of a single-phase bridge controlled rectifier (Full converter).
- To demonstrate the operation of a single-phase bridge controlled rectifier with freewheeling diode (Semi-converter).

THEORY

Single-phase Full converter:

The circuit arrangement of a single phase full converter is shown in fig- 4.1(a) with inductive load. During the positive half cycle, thyristors T_1 and T_2 are forward biased; and when these two thyristors are fired simultaneously at $\omega t = \alpha$, the load is connected to the input supply through T_1 and T_2. Due to the inductive load, thyristor T_1 and T_2 will continue to conduct beyond $\omega t = \pi$, even through the input voltage is already negative. During the negative half cycle of the input voltage, thyristors T_3 and T_4 are forward biased; and firing of the thyristors T_3 and T_4 will apply the supply voltage across thyristors T_1 and T_2 as reverse blocking voltage. T_1 and T_2 will be turned off due to line or natural commutation and the load current will be transferred from $T_1$and T_2 to T_3 and T_4. Fig-4.1(b) shows the regions of converter operation and fig-4.1(c) shows the waveforms for input , output voltage and input, output current.

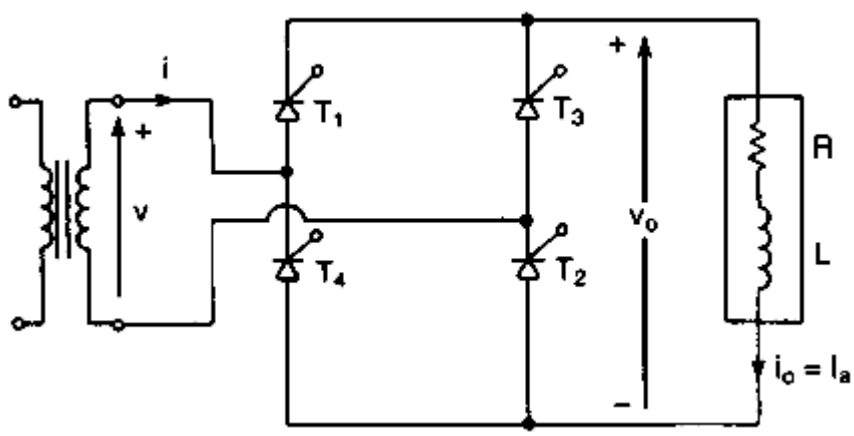

Fig- 4.1(a): Circuit diagram of Single phase full converter

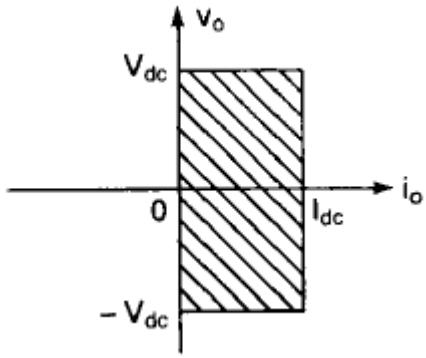

Fig-4.1(b): Regions of Single phase Full converter operation.

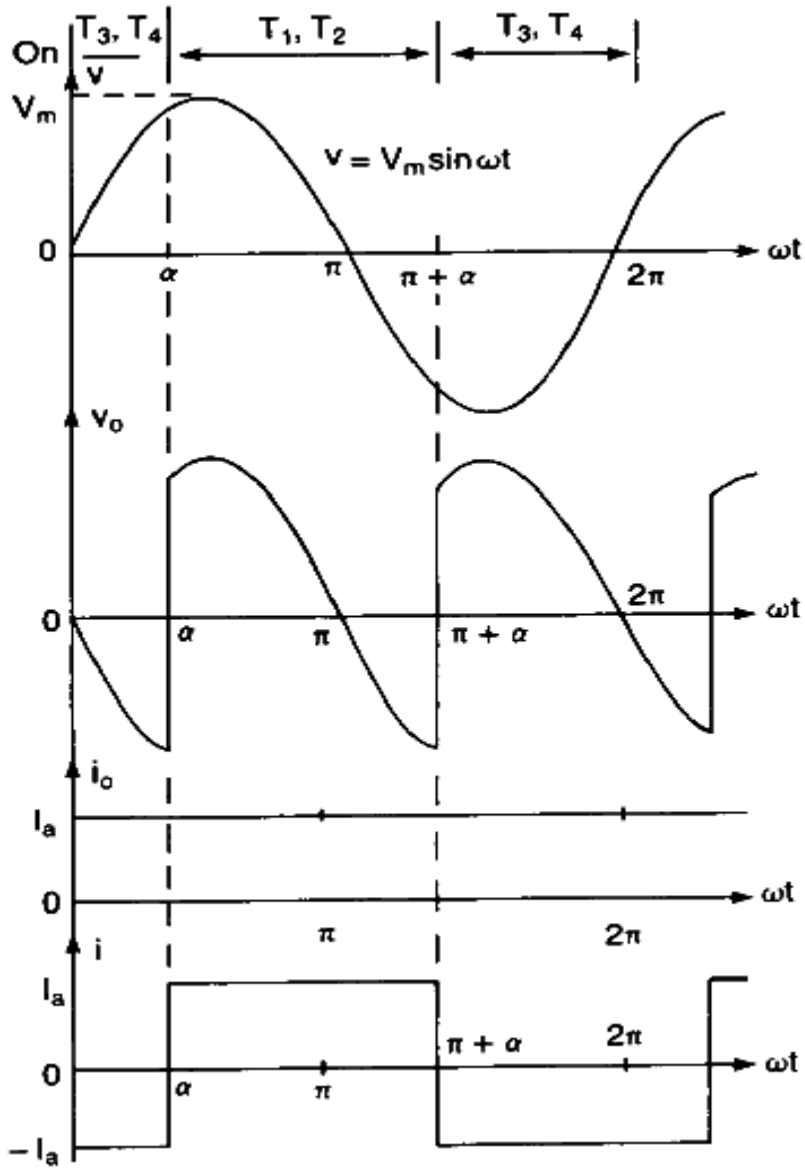

Fig- 4.1(c): Waveforms for Single phase full converter.

During the period from α to π, the input voltage v and input current i, are positive; and the power flows from the supply to the load. The converter is said to be operated in rectification mode. During the period from π to π+α, the input voltage, v is negative and the input current, i is positive; and there will be reverse power flow from the load to the supply. The converter is operated in inversion mode. Depending on the value of α, the average output voltage could be either positive or negative and it provides two quadrant operation.

The following equation gives the value of the average output voltage V_0 as a function of the firing angle. This equation is valid only when conduction is continuous, that is, when the on-time of the thyristors corresponds to 180^0.

$$V_0\,(dc) = (2V_m/\pi)\cos\alpha \quad \text{.....(4.1)}$$

Where V_m is the peak value of the input voltage and
α is the firing angle in degrees.

Single phase Semi converter:

The circuit arrangement of a single-phase semi converter is shown in Fig-4.2(a) with a highly inductive load. The loads current is assumed continuous and ripple free. During the positive half cycle, thyristor T_1 is forward biased. When thyristor T_1 is fired at ωt=α, the load is connected to the input supply through T_1 and D_2 during the period $\alpha \le \omega t \le \pi$. During the period from $\pi \le \omega t \le (\pi+\alpha)$, the input voltage is negative and the freewheeling diode D_m is forward biased. D_m conducts to provide the continuity of current in the inductive load. The load current is transferred from T_1 and D_2 to D_m; and thyristor T_1 and D_2 are turned off. During the negative half-cycle of input voltage, thyristor T_2 is forward biased, and the firing of thyristor T_2 at ωt= π+α reverse bias D_m. The diode D_m is turned off and the load is connected to the supply through T_2 and D_1.

Fig-4.2(b) Shows the region of converter operation, where both the output voltage and current have positive polarity. Fig-4.2(c) shows the waveforms for the input voltage, output voltage, input current and currents through T_1, T_2, D_1, and D_2.

The average output voltage can be found from,

$$V_{dc} = \frac{Vm}{\pi}(1 + cos\alpha) \quad \text{.....(2)}$$

And V_{dc} can be varied from $2V_m/\pi$ to 0 by varying α from 0 to π.

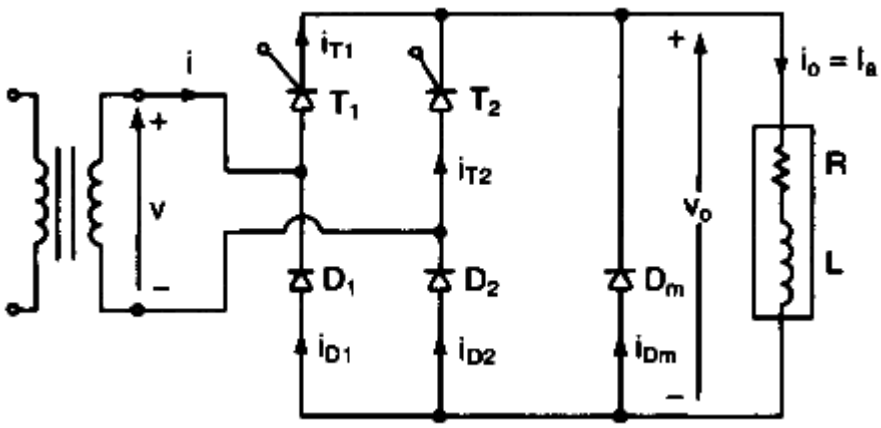

Fig-4.2(a): Circuit diagram of Single phase Semiconverter.

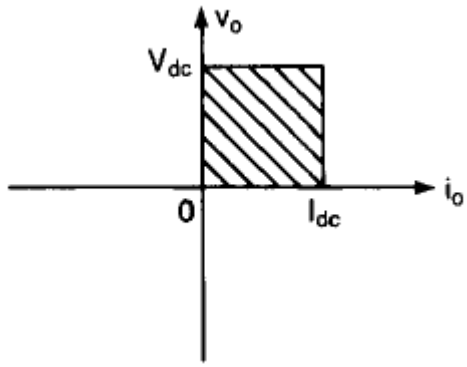

Fig-4.2(b): Regions of Single phase Semiconverter operation.

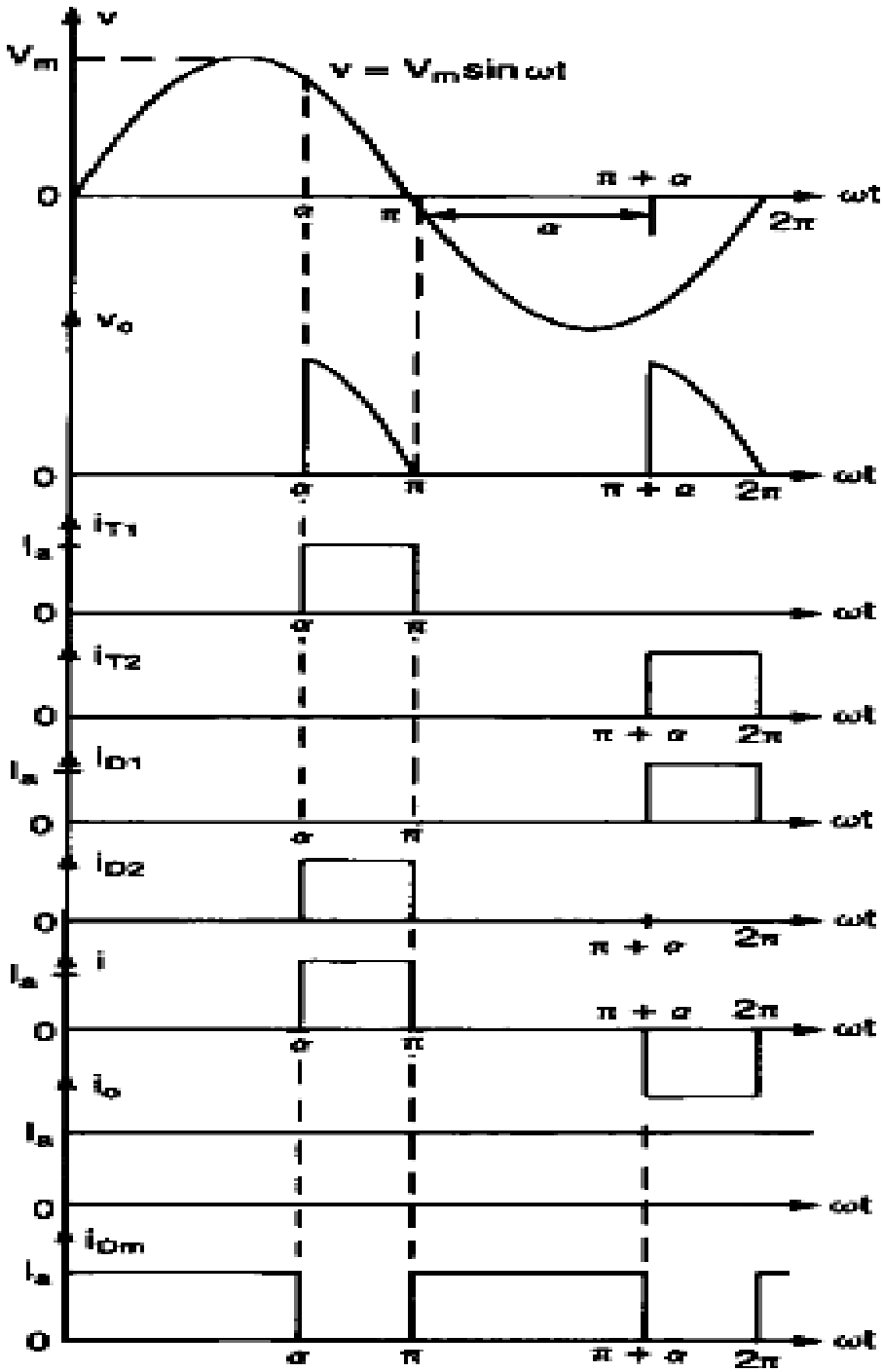

Fig-4.2(c): Waveforms for Single phase Semiconverter.

Procedure summary

In the first part of the exercise, you will set up the equipment.

In the second part, you will observe the operation of a controlled bridge supplying a passive load, with both a resistive and an inductive load.

EQUIPMENT REQUIRED

1. Mobile Workstation.
2. Resistive Load.
3. DC voltmeter/Ammeter.
4. Power Supply.
5. Enclosure/Power Supply.
6. Power Thyristor.
7. Power Diodes.
8. Connection Leads & Accessories.
9. Thyristor Firing Unit.
10. Current/Voltage Isolator.
11. Oscilloscope.

PROCEDURE

1. Install the Power Supply, the Enclosure / Power Supply, the Resistive Load, the Smoothing inductors, the DC Voltmeter/Ammeter, the Power Thyristors, and the Power Diodes modules in the Mobile Workstation.
2. Install the Thyristor Firing Unit and the Current./Voltage isolators in the Enclosure/ Power Supply.
3. On the Power Supply, set the 24-V ac power switch to the ON position.
4. Make sure that the toggle switches on the Power Thyristors and the Resistive Load modules are all set to the O (open) position.
7. Set up the circuit of Figure-4.1(a). Connect multimeter and oscilloscope according to data table-4.1.
8. Turn on the Power Supply, and take reading according to the Data table-4.1.
9. After completing table-4.1, set up the circuit as fig-4.2(a). Connect multimeter and oscilloscope according to data table-4.2.
10. Turn on the power supply and take reading according to data table-4.2.

Experimental Data:

Table-4.1: Data for Full converter:

V_{in} =200V [rms], R= 1200Ω, L= 45.9H.

No. Of obs.	Firing Angle α [degree]	Input and output voltage, V_{in} and V_0 (wave shape)	Output voltage V_0[dc] (measured)	Output voltage V_0[dc] (calculated)	Output current I_0[dc] (measured)	V_0 and I_0 (wave shape)	V_0 and i_s (wave shape)
1	0						
2	30						
3	60						
4	90						
5	120						
6	150						
7	180						

Table-4.2: Data for Semiconverter:

V_{in} =200V [rms], R= 1200Ω, L= 45.9H.

No. Of obs.	Firing Angle α [degree]	Input and output voltage, V_{in} and V_0 (Wave shape)	Output voltage V_0[dc] (measured)	Output voltage (calculated)	Output current I_0[dc](measured)	V_0 and I_0 (wave shape)	V_0 and i_s (wave shape)	V_0 and I_{dm} (Wave shape)
1	0							
2	30							
3	60							
4	90							
5	120							
6	150							
7	180							

Review Questions:

1. What is the difference between this rectifier circuit and the full-wave rectifier circuit seen in Experiment-2?
2. What effect does the inductive load have on the operation of the circuit?
3. What effect does the free-wheeling diode have on the operation of the circuit?

International Islamic University Chittagong (IIUC)
Department of Electrical & Electronic Engineering
Course Title –Power Electronics Sessional
Course No.-EEE-4706

Experiment no.05: To study the operation of three Phase Semi-converter and Full converter.

OBJECTIVE

- To demonstrate the operation of three Phase Semi-converter.
- To demonstrate the operation of three Phase Full converter.

THEORY

Three Phase Semi-converter:

Figure-5.1(a) shows a three-phase semiconverter with a highly inductive load and the load current has a negligible ripple current. Figure-5.1(b) shows the waveforms for input voltage, output voltage, and input current, and current through thyristors and diodes (for $\alpha = 90^0$). The frequency of output voltage is $3f_s$.The delay angle α can be varied from from 0 to π. During the period $\pi/6 \leq \omega t < 7\pi/6$, thyristor T_1 is forward biased. If T_1 is fired at $\omega t = (\pi/6+\alpha)$,$T_1$ and D_1 conduct and the line-to-line voltage υ_{ac} appears across the load. At $\omega t = 7\pi/6$, υ_{ac} starts to be negative and the freewheeling diode D_m conducts. The load current continuous to flow through D_m; and T_1 and D_1 are turned off. If there are no freewheeling diode, T_1 would continue to conduct until thyristor T_2 fired at $\omega t = (5\pi/6+\alpha)$ and the freewheeling action would be accomplished through T_1 and D_2. **If $\alpha \leq \pi/3$, each thyristor conducts for $2\pi/3$ and the freewheeling diode D_m does not conduct. The waveforms for a three-phase semiconverter with $\alpha \leq \pi/3$ are shown in Fig-5.1(c).**

We define the three line-neutral voltages as follows:

$\upsilon_{an} = V_m \sin \omega t$

$\upsilon_{bn} = V_m \sin (\omega t - \frac{2\pi}{3})$

$\upsilon_{cn} = V_m \sin (\omega t + \frac{2\pi}{3})$

For $\alpha \geq \pi/3$, and discontinuous output voltage: The average output voltage is found from

$$V_{dc} = = \frac{3\sqrt{3}\,Vm}{2\pi}\,(1 + cos\alpha) \quad \text{.....} \quad (5.1)$$

For $\alpha \leq \pi/3$, and continuous output voltage: $V_{dc} = = \frac{3\sqrt{3}\,Vm}{2\pi}\,(1 + cos\alpha)$ ..... (5.2)

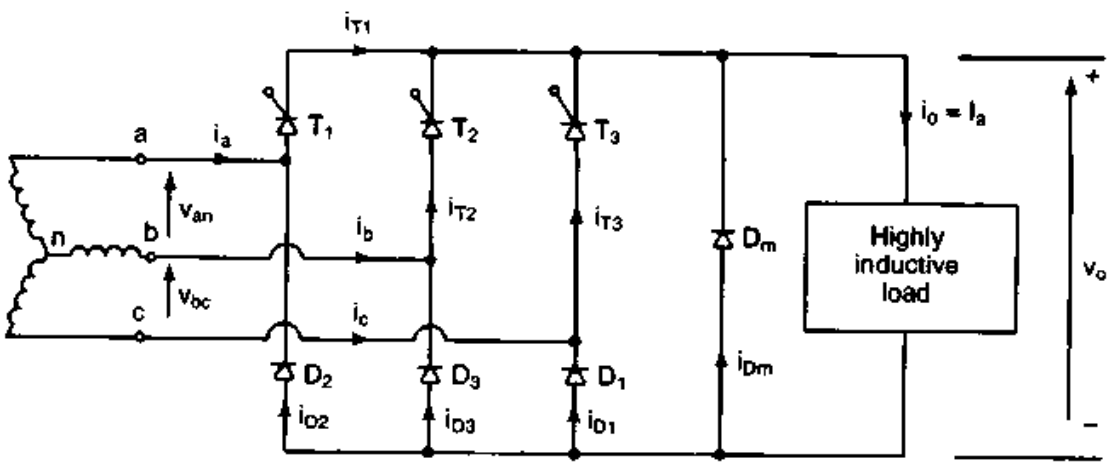

Fig-5.1(a): Three Phase semiconverter.

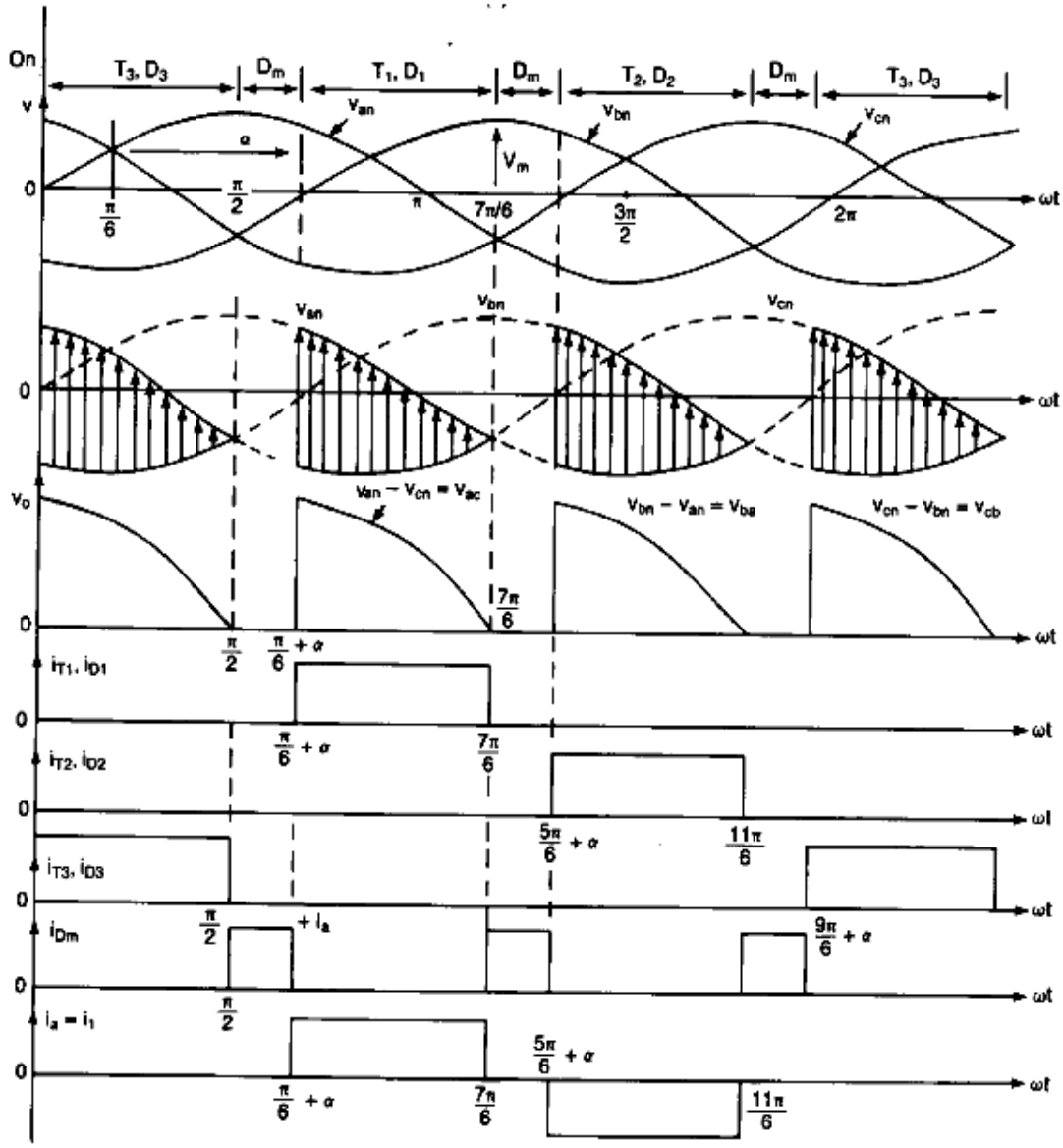

Fig-5.1(b): Waveforms of three phase Semiconverter for $\alpha = 90^0$.

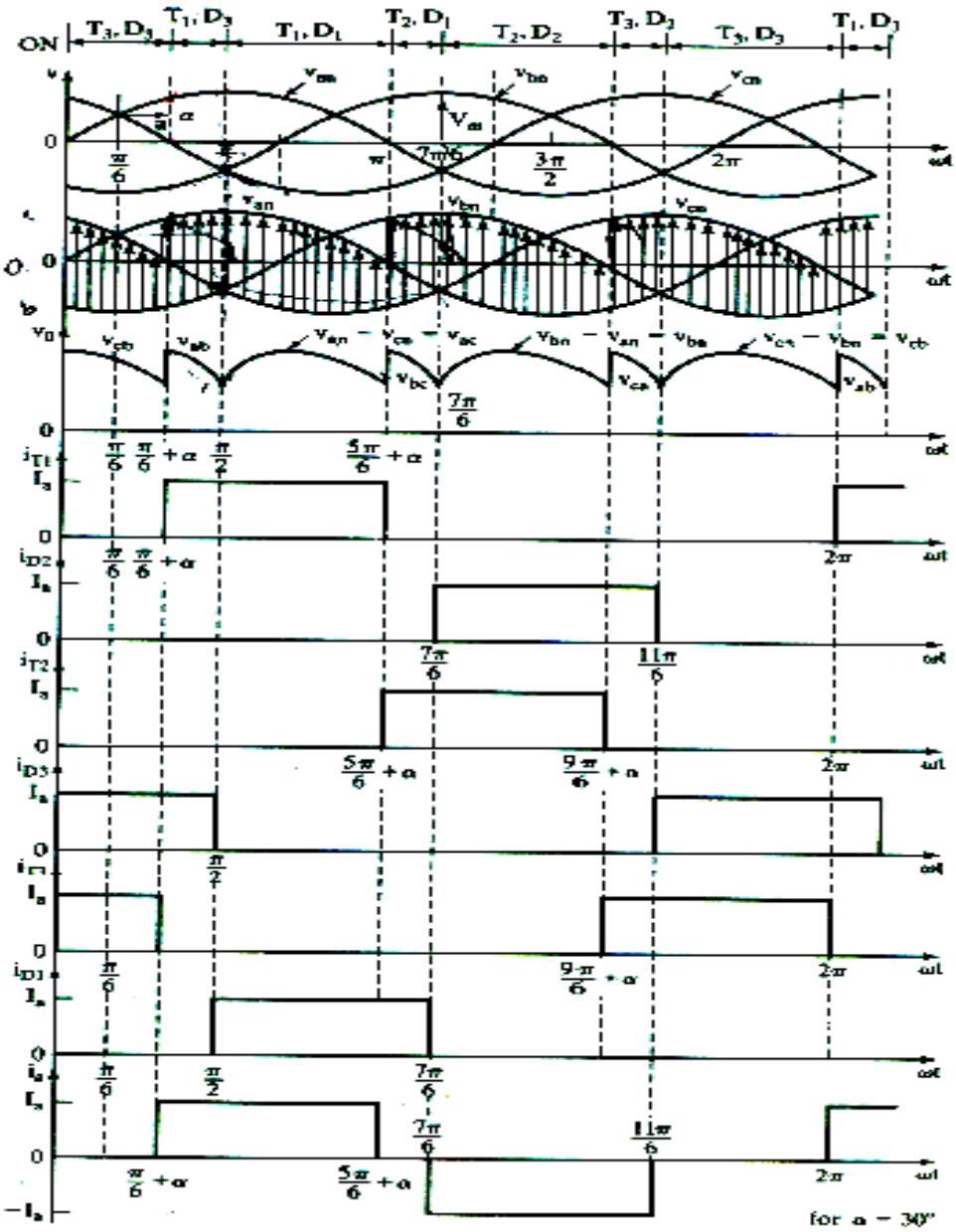

Fig-5.1(c): Waveforms of three phase semi-converter for α= 30^0

Three Phase Full converter:

Figure-5.2(a) shows a full converter circuit with a highly inductive load. The thyristors are fired at an interval of $\pi/3$.The frequency of output ripple voltage is $6f_s$ and the filtering requirement is less than that of three phase semi and half-wave converters. At $\omega t=\pi/6+\alpha$, thyristor T_6 is already conducting and thyristor T_1 is turned on. During interval $(\pi/6+\alpha) \leq \omega t \leq (\pi/2+\alpha)$,thyristors T_1 and T_6 conduct and the line-to-line voltage υ_{ab} $(=\upsilon_{an}- \upsilon_{bn})$ appears across the load. At $\omega t= \pi/2+\alpha$, thyristor T_2 is fired and thyristor T_6 is reversed biased immediately.T_6 is turned off due to natural communication. During interval $(\pi/2+\alpha) \leq \omega t \leq (5\pi/6+\alpha)$,thyristors T_1 and T_2 conduct and the line-to-line voltage υ_{ac} appears across the load. If the thyristors are numbered, as shown in Figure-5.2(b) the firing sequence is 12, 23, 34, 45, 56 and 61. Fig-5.2(b) shows the waveforms for input voltage, output voltage, input current, and currents through thyristors.

The average output voltage is found from $V_{dc}= \frac{3\sqrt{3}\,Vm}{\pi}\cos\alpha$ ..... (5.3)

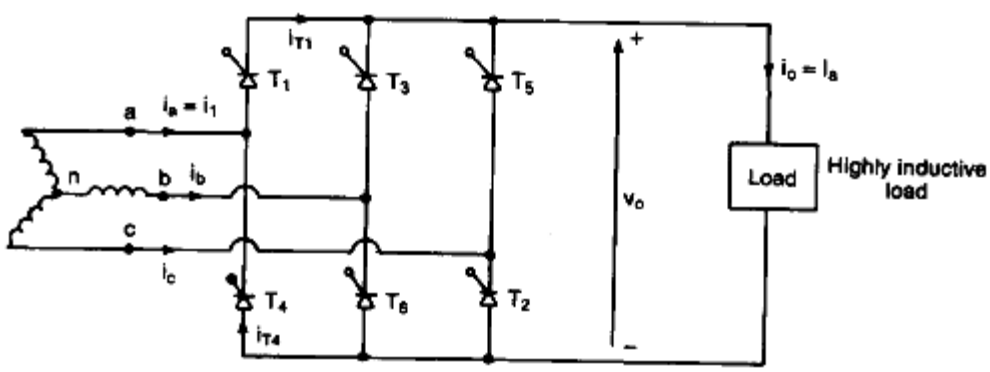

Fig-5.2(a): Three Phase Full converter.

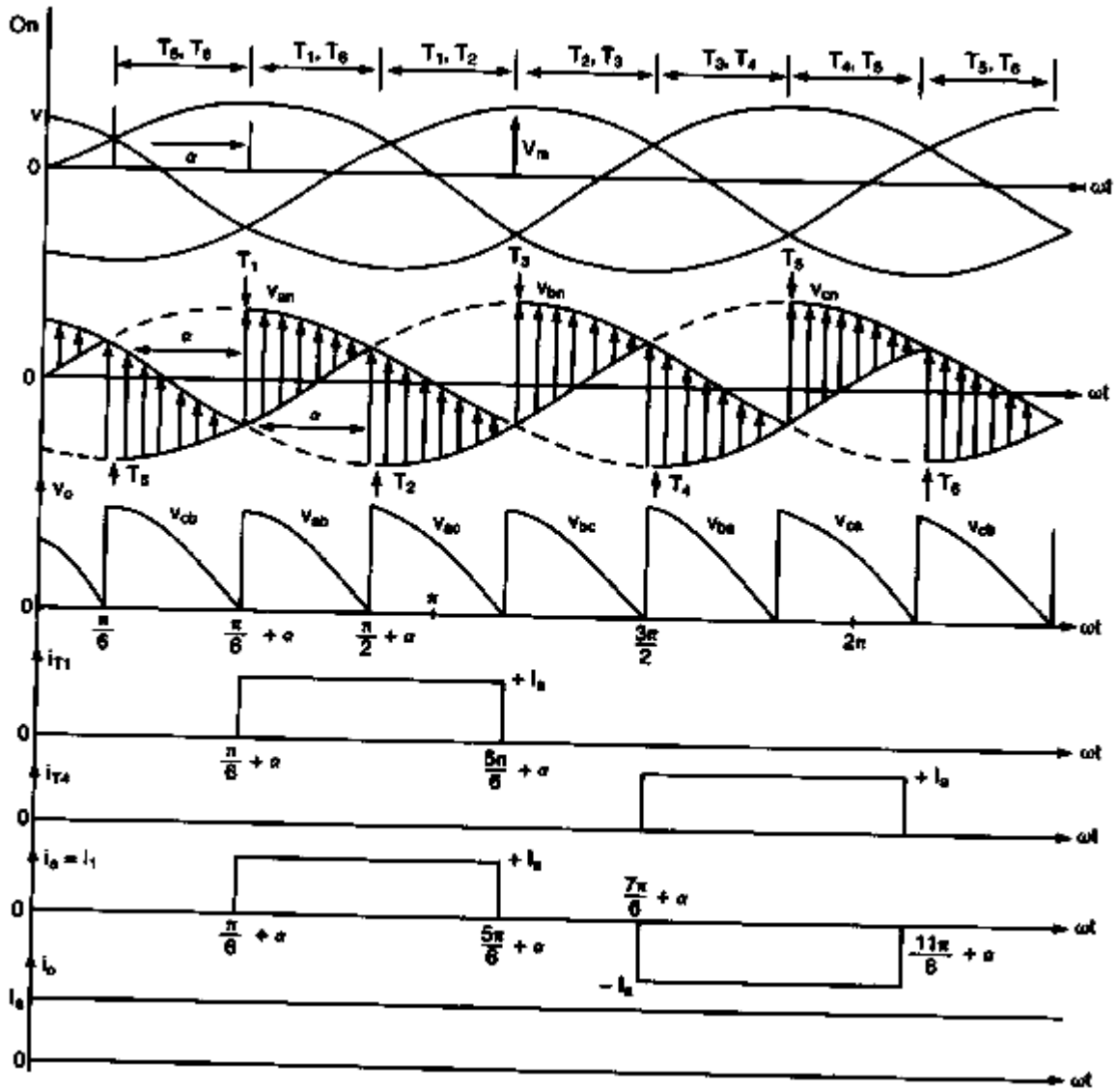

Fig-5.2(b): Waveforms of three Phase Full converter for α= 60^0.

Fig-5.2(b) shows the waveforms for α= π/3. For α > π/3, the instantaneous output voltage v_o has a negative part. Because the current through thyristors cannot be negative, the load current is always positive.

EQUIPMENT REQUIRED

1. Mobile Workstation
2. Resistive Load
3. DC voltmeter/Ammeter
4. Power Supply
5. Enclosure/Power Supply
6. Power Thyristor
7. Power Diodes
8. Connection Leads & Accessories
9. Thyristor Firing Unit
10. Current/Voltage Isolator
11. Oscilloscope

PROCEDURE

Setting up the equipment

1. Install the Power Supply, the Enclosure / Power Supply, the Resistive Load, the Smoothing inductors, the DC Voltmeter/Ammeter, the Power Thyristors, and the Power Diodes modules in the Mobile Workstation.

2. Install the Thyristor Firing Unit and the Current./Voltage isolators in the Enclosure/ Power Supply.
3. Make sure that the main power switch of the Power Supply is set to the O (OFF) position. Set the voltage control knob to O. Connect the Power Supply to a three-phase wall receptacle.
4. Plug the Enclosure/Power Supply line cord into a wall receptacle. Set the rocker switch of the Enclosure! Power Supply to the l (ON) position.
5. On the Power Supply, set the 24-V ac power switch to the (ON) position.
6. Set up the circuit of Figure-5.1(a). Use highly inductive load.
7. Turn on the Power Supply, and take reading according to the Data table-5.1.
8. Set up the circuit of Figure-5.2(a). Use highly inductive load.
9. Turn on the Power Supply, and take reading according to the Data table-5.2

Experimental Data:

Table-5.1: Data for three phase semi-converter.

$V_{an}=V_{bn}=V_{cn}=100V$ [rms], R= 1200Ω, L= 45.9H

No. Of obs.	Firing Angle α [degree]	V_0 and I_a (wave shape)	Output voltage V_0[dc] (measured)	Output voltage V_0[dc] (calculated)	Output current I_0[dc](measured)	V_0 and i_{dm} (wave shape)
1	0					
2	30					
3	60					
4	90					
5	120					
6	150					
7	180					

Table-5.2: Data for three phase Full converter.

$V_{an}=V_{bn}=V_{cn}=100V$ [rms], R= 1200Ω, L= 45.9H.

No. Of obs.	Firing Angle α [degree]	V_0 and I_0 (wave shape)	Output voltage V_0[dc] (measured)	Output voltage V_0[dc] (calculated)	Output current I_0[dc] (measured)	V_0 and i_a (wave shape)
1	0					
2	30					
3	60					
4	90					
5	120					
6	150					
7	180					

Review Questions:

1. Explain the operation of three phase semi-converter and full converter at different firing angle.
2. Explain the effect of freewheeling diode on circuit operation.

International Islamic University Chittagong (IIUC)
Department of Electrical & Electronic Engineering
Course Title –Power Electronics Sessional
Course No.-EEE-4706

Experiment no.06: To study the operation of Single Phase Bidirectional Controller (AC voltage Controller).

OBJECTIVE

• To become familiar with the principles of ac phase control.
• To observe the operation of Bidirectional Controller.

THEORY

Control principles:

In ac phase control, one or more thyristors are used to control the current in an ac circuit. The thyristors may also rectify the ac source voltage to convert it into dc. A thyristor begins to conduct when a firing pulse is applied to the gate, providing that the thyristor is forward biased at that time. The firing pulses are timed with respect to the phase of the ac source voltage. In a single-phase circuit, the control circuit detects the beginning (0°) of each cycle of the ac source voltage, that is, when the waveform passes through zero, going from negative to positive. Then, the control circuit sends firing pulses to the various thyristors. Each pulse is delayed a certain number of degrees, so the thyristors begin to conduct at precisely the desired point in the cycle.

Full-wave phase control or Bidirectional control:

The circuit of Fig-6.1 can provide full-wave ac phase control. With this circuit, and the appropriate control circuitry, you can control the power consumed by the load. A common example of this type of circuit is the "dimmer" circuit used to control incandescent lamps.

Fig-6.2 shows the waveforms associated with this circuit, when the load is purely resistive. The control circuit sends a firing pulse to the gate of Q_1, α^0 after the beginning of the cycle so that this thyristor begins to conduct. It conducts for the remainder of the first half-cycle. A second firing pulse is sent to Q_2, 18O° after the pulse to Q_1, causing Q_2 to conduct from that point to the end of the second half-cycle. When $\alpha = 0^0$, the phase-control circuit conducts for the entire cycle and the load receives maximum power.

Output voltage can be calculated by the following equation:

$$\mathbf{V_0 = V_s\,[1/\pi\,(\pi-\alpha+\sin 2\alpha\,/2)]^{1/2}} \quad \text{.....(6.1)}$$

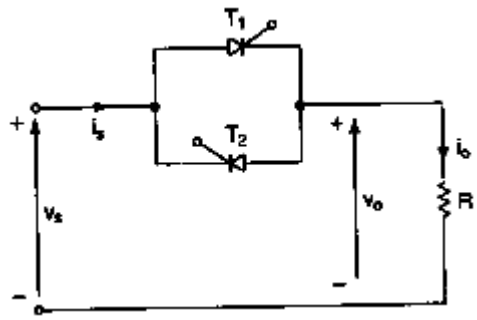

Fig-6.1: Single phase Bidirectional Controller with resistive load.

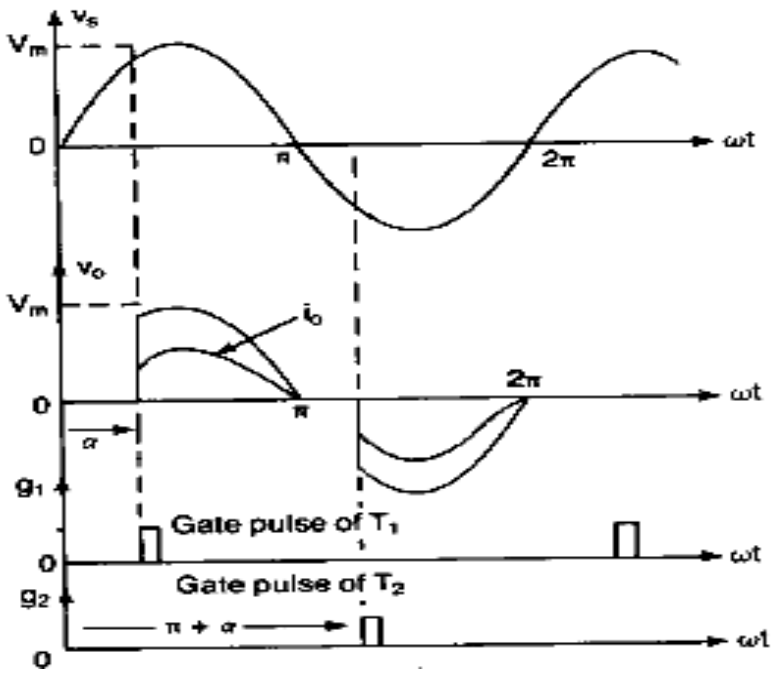

Fig-6.2: Waveforms of Single phase bidirectional Controller.

EQUIPMENTS REQUIRED

1. Mobile Workstation
2. Resistive Load
3. DC voltmeter/Ammeter
4. AC Ammeter
5. AC Voltmeter
6. Power Supply
7. Enclosure/Power Supply
8. Power Thyristor
9. Power Diodes
10. Connection Leads & Accessories
11. Thyristor Firing Unit
12. Current/Voltage Isolator
13. Oscilloscope.

PROCEDURE

1. Install the Power Supply, the Enclosure / Power Supply the Resistive Load, the Smoothing Inductors, the DC Voltmeter/Ammeter, the AC Ammeter, the AC Voltmeter, the Power Thyristors, and the Power Diodes modules in the Mobile Workstation.

2. Install the Thyristor Firing Unit and the Current/Voltage isolators in the Enclosure / Power Supply.
3. Make sure that the main power switch of the Power Supply is set to the O (OFF) position. Set the voltage control knob to 0. Connect the Power Supply to a three-phase wall receptacle.

4. Plug the Enclosure! Power Supply line cord into a wall receptacle. Set the rocker switch of the Enclosure / Power Supply to the 1 (ON) position.
5. On the Power Supply, set the 24-V ac power switch to the 1 (ON) position.
6. Make sure that the toggle switches on the Power Thyristors and the Resistive Load modules are all set to the O (open) position.
7. Set up the circuit of Fig-6.1, use the resistive load R.
8. Turn on power supply and take reading according to data table.

Experimental Data:

Table for Bidirectional controller:

V_{in} =200V [rms], R= 2400Ω

No. Of obs.	Firing Angle α [degree]	V_{in} and V_0 (Wave shape)	V_0 and I_0 (wave shape)	Output voltage V_0[rms] (measured)	Output voltage V_0[rms] (calculated)	Output current I_0[rms](measured)
1	0					
2	30					
3	60					
4	90					
5	120					
6	150					
7	180					

Review Question:

1. Vary the FIRING ANGLE on the Thyristor Firing Unit by adjusting the DC SOURCE control. Describe the effect on the output waveforms.
2. Explain the operation of this circuit.

International Islamic University Chittagong (IIUC)
Department of Electrical & Electronic Engineering
Course Title –Power Electronics Sessional
Course No.-EEE-4706

Experiment no.07: To study the operation of three Phase Full Wave Controller.

OBJECTIVE

- To demonstrate the operation of three Phase Full wave controller.

THEORY

Three Phase Full wave controller:

The circuit diagram of a three phase full wave (or bidirectional) controller is shown in fig-7.1 with a Y-connected resistive load. The firing sequence of thyristors is T_1,T_2,T_3,T_4,T_5,T_6.

The waveforms for the input voltages, conduction angles of thyristors, and output phase voltages are shown in fig-7.2 and fig-7.3 for $\alpha = 60^o$ and $\alpha = 120^0$ respectively. For $0 \leq \alpha < 60^o$, Immediately before the firing of T_1, two thyristors conduct. Once T1 is fired, three thyristors conduct. A thyristor turns off when its currents attempt to reverse. The conditions alternate between two and three conducting thyristors. For $60^0 \leq \alpha < 90^0$, only two thyristors conduct at any time.For $90^0 \leq \alpha < 150^0$, although two thyristors conduct at any time, there are periods when no thyristors are on. For $\alpha \geq 150^0$, there is no period for two conducting thyristors and the output voltage becomes zero at $\alpha = 150^0$.The range of delay angle is $0 \leq \alpha \leq 150^0$.

Similar to half-wave controllers, the expression for the rms output phase voltage depends on the range of delay angles. The rms output voltage for a Y-connected load can be found as follows.

For $0 \leq \alpha < 90^o$:

$$V_0 = \sqrt{6}\, V_s \left[\frac{1}{\pi}\left(\frac{\pi}{6} - \frac{\alpha}{4} + \frac{\sin 2\alpha}{8}\right)\right]^{1/2} \quad \text{.....} \quad (7.1)$$

For $60^o \leq \alpha < 90^o$:

$$V_0 = \sqrt{6}\, V_s \left[\frac{1}{\pi}\left(\frac{\pi}{12} + \frac{3\sin 2\alpha}{16} + \frac{\sqrt{3}\cos 2\alpha}{16}\right)\right]^{1/2} \quad \text{.....} \quad (7.2)$$

For $90^o \leq \alpha < 150^o$:

$$V_0 = \sqrt{6}\, V_s \left[\frac{1}{\pi}\left(\frac{5\pi}{24} - \frac{\alpha}{4} + \frac{\sin 2\alpha}{16} + \frac{\sqrt{3}\cos 2\alpha}{16}\right)\right]^{1/2} \quad \text{.....} \quad (7.3)$$

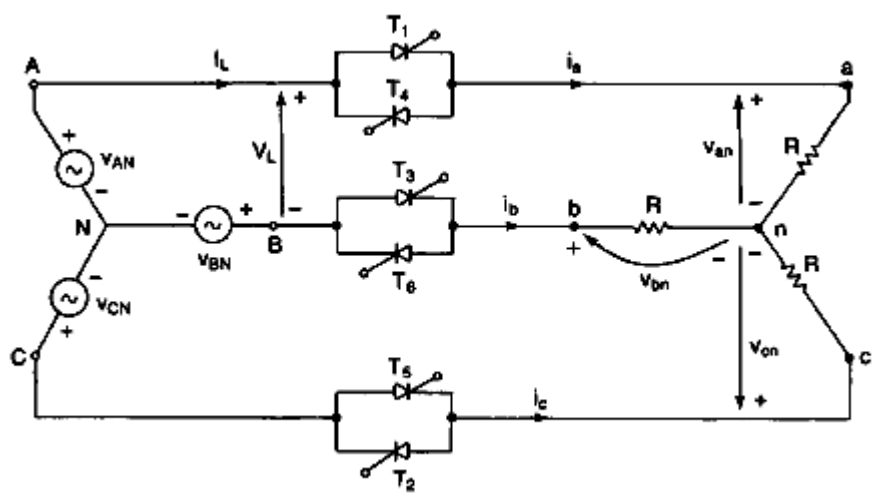

Fig-7.1: Three Phase Full wave controller.

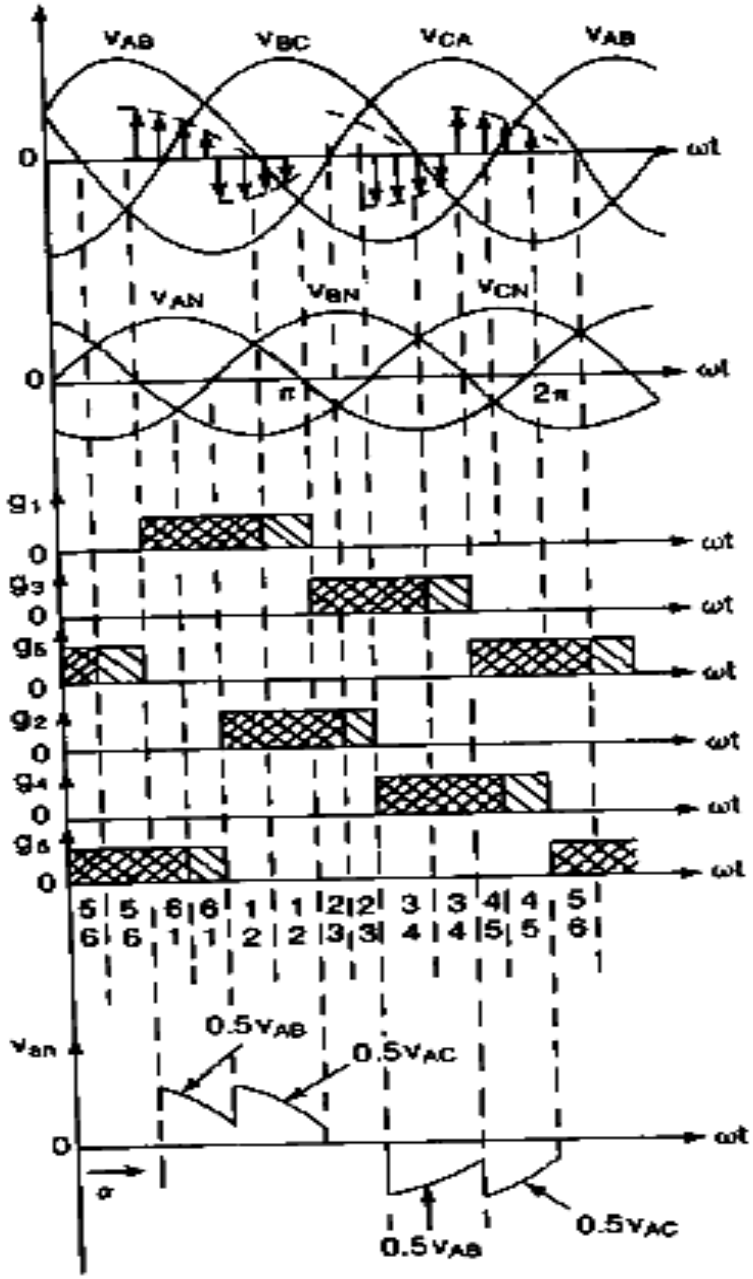

Fig-7.2: Waveforms of three Phase Full wave controller for $\alpha = 60^0$.

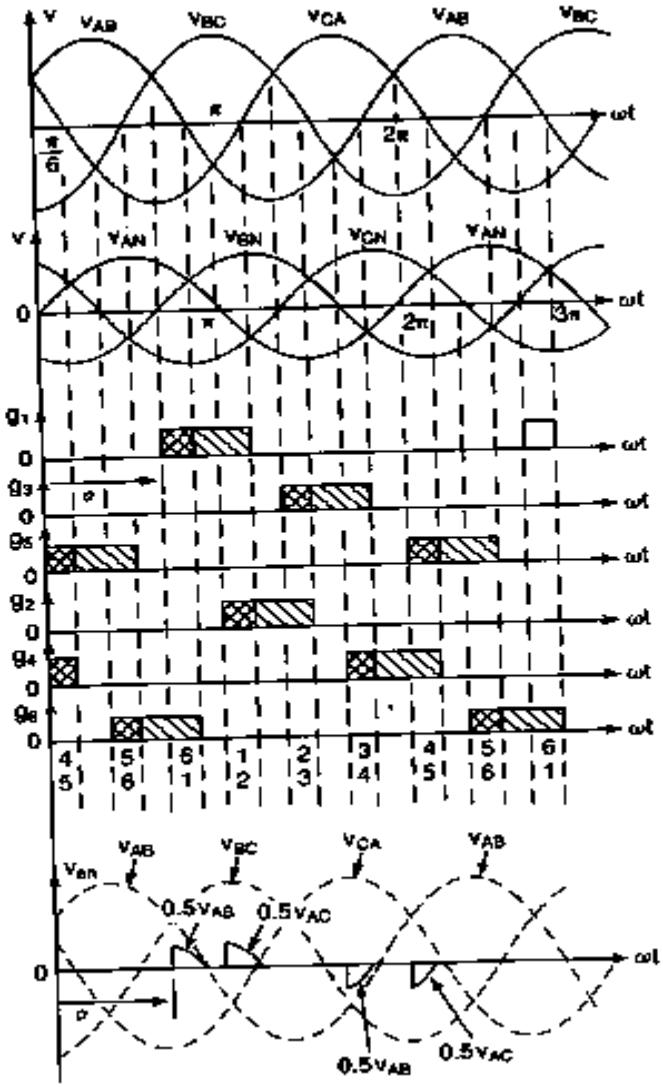

Fig- 7.3: Waveforms of three Phase Full wave controller for α= 120^0

EQUIPMENT REQUIRED

1. Mobile Workstation
2. Resistive Load
3. DC voltmeter/Ammeter
4. Power Supply
5. Enclosure/Power Supply
6. Power Thyristor
7. Connection Leads & Accessories
8. Thyristor Firing Unit
9. Current/Voltage Isolator
10. Oscilloscope

PROCEDURE

1. Install the Power Supply, the Enclosure / Power Supply, the Resistive Load, the DC Voltmeter/Ammeter, and the Power Thyristors modules in the Mobile Workstation.
2. Install the Thyristor Firing Unit and the Current./Voltage isolators in the Enclosure/ Power Supply.
3. Make sure that the main power switch of the Power Supply is set to the O (OFF) position. Set the voltage control knob to O. Connect the Power Supply to a three-phase wall receptacle.
4. Plug the Enclosure/Power Supply line cord into a wall receptacle. Set the rocker switch of the Enclosure! Power Supply to the l (ON) position.
5. On the Power Supply, set the 24-V ac power switch to the (ON) position.
6. Make sure that the toggle switches on the Power Thyristors and the Resistive Load modules are all set to the O (open) position.
7. Set up the circuit of Figure-7.1. Use highly inductive load.
8. Turn on the Power Supply, and take reading according to the Data table-7.1.
9. Change the firing angle and take reading.

.

Experimental Data:

Table-7.1: Data for three phase Full converter.

V_{AN}= V_{BN}= V_{CN}= 100V [rms], R= 1200Ω.

No. Of obs.	Firing Angle α [degree]	V_{an} and V_{bn} (wave shape)	Output voltage V_{an}[rms] (measured)	Output voltage V_{bn}[rms] (measured)	V_{an} and I_{an} (waveshape)
1	0				
2	30				
3	60				
4	90				
5	120				
6	150				
7	180				

Review Questions:

1. Explain the operation of three phase full controller with different firing angle.
2. Compare the output voltage and wave shape between single phase and three phase full controller.

International Islamic University Chittagong (IIUC)
Department of Electrical & Electronic Engineering
Course Title –Power Electronics Sessional
Course No.-EEE-4706

Experiment no. 08: To study the operation of Single Phase Bridge Inverter.

OBJECTIVE:

- To become familiar with the principles of Inverter.
- To observe the operation of Single Phase Bridge Inverter.

THEORY:

Single Phase Bridge Inverter:

Inverters are devices which convert dc power into ac power. This allows single phase, two-phase and three-phase ac power networks with variable frequency and voltage to be obtained. A single-phase inverter can be obtained using a four-quadrant chopper. A single-phase bridge voltage source inverter (VSI) is shown in figure-8.1. It consists of four choppers. When transistors Q_1 and Q_2 are turned on simultaneously, the input voltage $V_{s.}$ appears across the load. If transistors Q_3 and Q_4 are turned on at the same time, the voltage across the load is reversed and is - V_s. The waveform for the output voltage is shown in fig-8.2.

The rms output voltage, $V_o = V_s$. ..... (8.1)

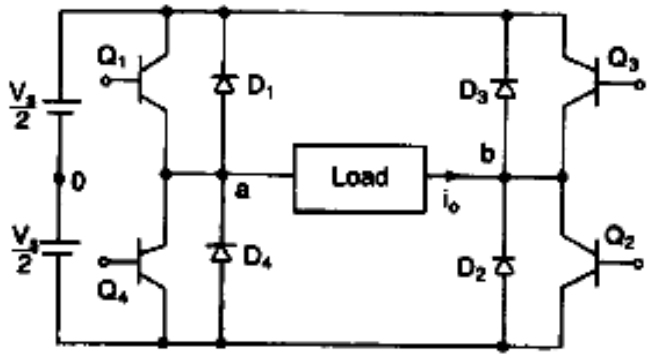

Fig-8.1: Single Phase Bridge Inverter

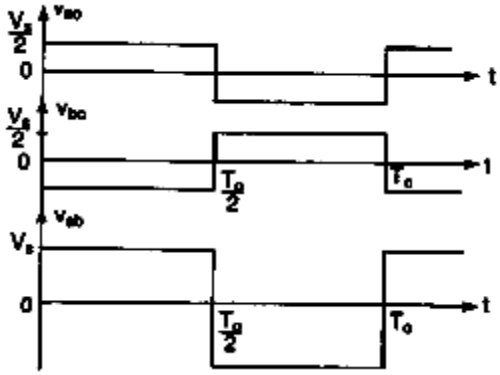

Fig-8.2: Waveforms of Single phase bridge inverter.

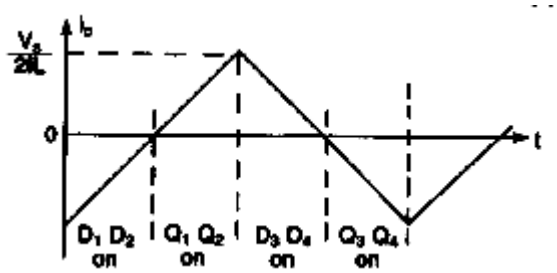

Fig-8.3: Load current with inductive load

EQUIPMENT REQUIRED

1. Mobile Workstation
2. Resistive Load
3. Inductive load
4. DC voltmeter/Ammeter
5. Power Supply
6. Power MOSFETs /IGBT
7. Enclosure/Power Supply
8. Connection Leads & Accessories
9. Chopper/Inverter Control Unit
10. Current/Voltage Isolator
11. Oscilloscope

PROCEDURE:

1. Install the Enclosure Power Supply, the Resistive Load, inductive load, the Power Diodes modules, Power MOSFET / IGBTs , chopper-inverter control unit, oscilloscope, current voltage Isolator in the Mobile Workstation.
2. Set up the circuit shown in Fig-8.1. And connect resistive load according to data table.
3. Connect oscilloscope to the output via current voltage isolator.
4. Connect Multi-meter to measure output AC voltage.
5. Turn on the power supply and take the reading according to data table-8.1.
6. Set up the circuit shown in Figure -8.1 and connect R-L load. Turn on the power supply and take the reading according to data table.
7. Vary the load according to data table-8.2 and take reading.

Experimental Data:

Table -8.1: Data for single phase Bridge inverter with R load:

V_s (dc) =200V.

No. Of obs.	Load R (ohm)	Output voltage & current ,V_0 & I_0 (wave shape)	Output voltage V_0(measured)	Output current I_0 (measured)
1	1200			
2	2400			
2	3600			
4	4800			

Table-8.2: Data for single phase Bridge inverter with R-L load:

V_s (dc) =200V.

No. Of obs.	Load [R(Ω) and L (H)]	Output voltage & current ,V_0 & I_0 (wave shape)	Output voltage V_0(measured)	Output current I_0 (measured)
1	R = 1200 and L= 3.8			
2	R = 1200 and L= 7.6			
3	R = 1200 and L= 15.3			
4	R = 2400 and L= 30.6			
5	R = 2400 and L= 45.9			

Review Questions:

1. What is the main function of inverters?
2. Briefly explain how dc power can be converted into ac power using four-quadrant chopper?
3. Describe the operation of a PWM single-phase inverter.

International Islamic University Chittagong (IIUC)
Department of Electrical & Electronic Engineering
Course Title –Power Electronics Sessional
Course No.-EEE-4706

Experiment no 09: To study the operation of three Phase Inverter (both 180^0 and 120^0 conduction).

OBJECTIVE:

- To become familiar with the principles of three Phase Inverter.
- To observe the operation of three Phase Inverter (both 180^0 and 120^0 conduction).

THEORY:

Three Phase Inverter:

A three-phase inverter built with six electronic switches and six free-wheeling diodes with R and R-L load is shown in fig-9.1 and 9.2 respectively. The two additional signals which the SWITCHING CONTROL SIGNAL GENERATOR produces consist of two complementary square-wave signals, as is the case for the signals which control the switching of the other two pairs of electronic switches (Q_1-Q4 and Q_2-Q_5). The use of complementary square-wave signals ensures that when one electronic switch in a pair is on, the other electronic switch in this pair is off, and vice versa. Each of the three pairs of electronic switches operates the same way. Switching control signals or gate signals are shown in fig-9.3. A positive voltage is applied to the load when the upper electronic switch (Q_1,Q_2 or Q_3) is on, whereas a negative voltage is applied to the load when the lower electronic switch (Q_4, Q_5 or Q_6) is on. This type of inverter is referred to as a 180°-modulation three- phase inverter. The three pairs of complementary square-wave signals are shifted by 120° with respect to each other, as shown in Figure 9.3. This makes switching occur at different instants in each pair of electronic switches. Therefore, the waveforms of the line to neutral voltages at the outputs of the 180^0-modulation three-phase inverter (phase voltages) are bipolar square waves which are shifted by 120°.

180^0 conduction: Each transistor conducts for 180°.Three transistors remain on at any instant of time. When transistor $Q_1$is switched on, terminal "a" is connected to the positive terminal of the dc input voltage. When transistor Q_4 is switched on, terminal "a" is brought to the negative terminal of the dc source. There are six modes of operation in a cycle and the duration of each mode is 60°.The transistors are numbered in the sequence of gating the transistors (e.g. 123,234,345,456,561 and 612).The gating signals shown in Fig-9.3 are shifted from each other by 60°.to obtain three-phase balanced (fundamental) voltages.

120^0 conduction: In this type of control, each transistor conducts for 120°. Only two transistors remain on at any instant of time. The gating signals are shown in Fig-9.4.The

conduction sequence of transistor is 61, 12, 23, 34, 45, 56, 61.There are three modes of operation in one half-cycle and the equivalent circuits for a Y-connected load are shown in Figure…During mode 1for $\leq \omega t \leq \pi/3$, transistors 1 and 6 conduct.

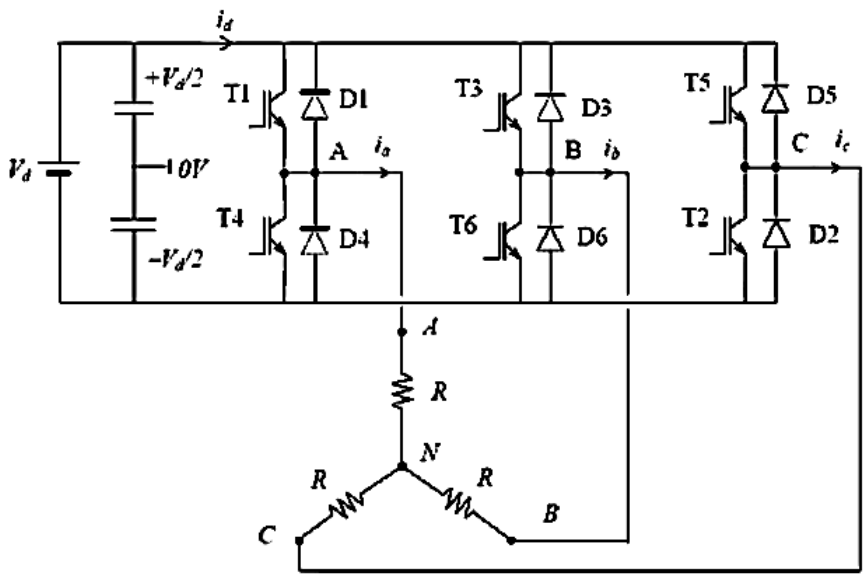

Fig-9.1: Three Phase Inverter with Six switches (IGBT) resistive load.

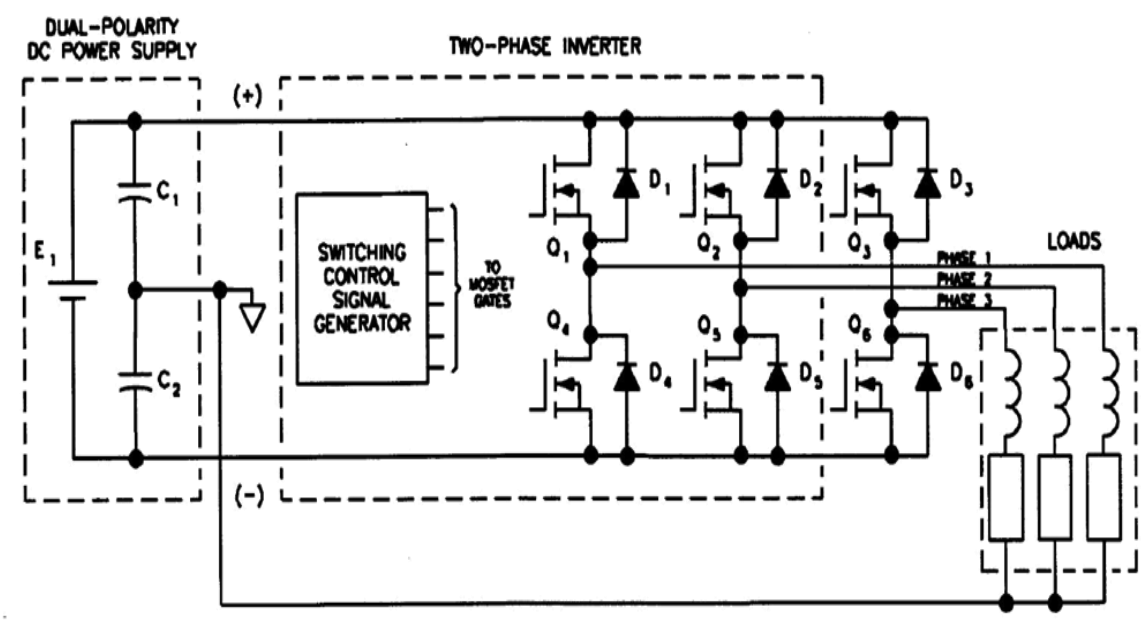

Fig- 9.2: A three-phase inverter built with six electronic switches (MOSFET) and six free-wheeling diodes with inductive load.

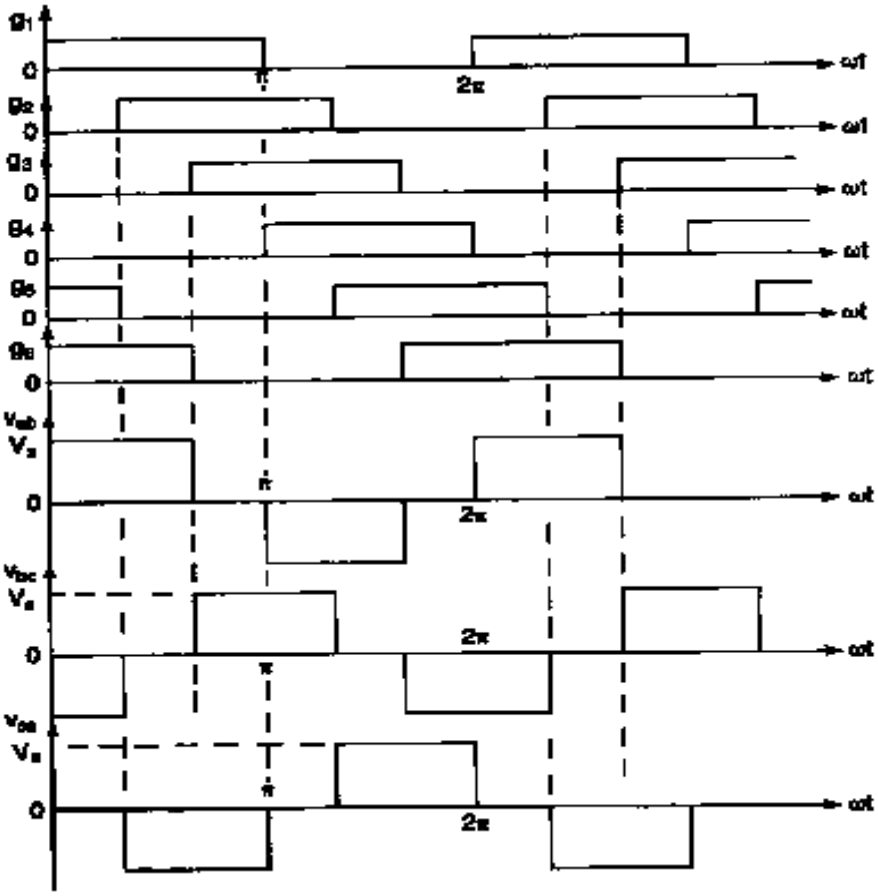

Fig-9.3: Switching control signals and Phase to Phase voltage in an 180^0-conduction three-phase inverter.

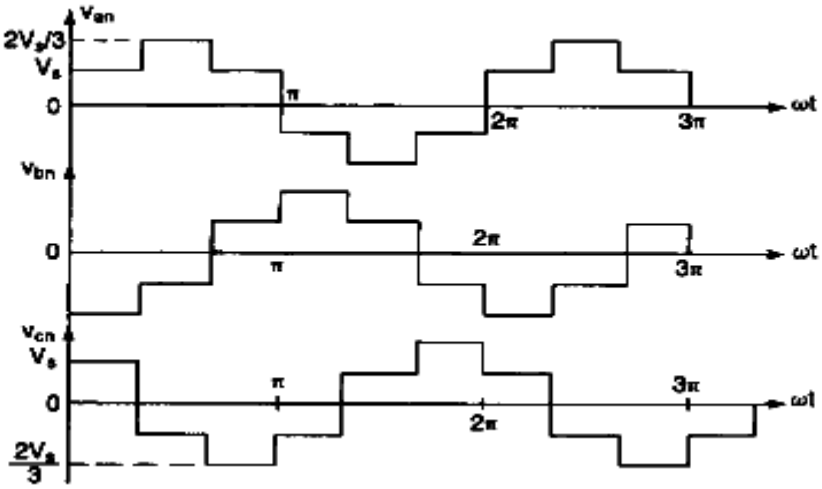

Fig-9.4: Phase voltage in an 180^0 conduction three phase inverter.

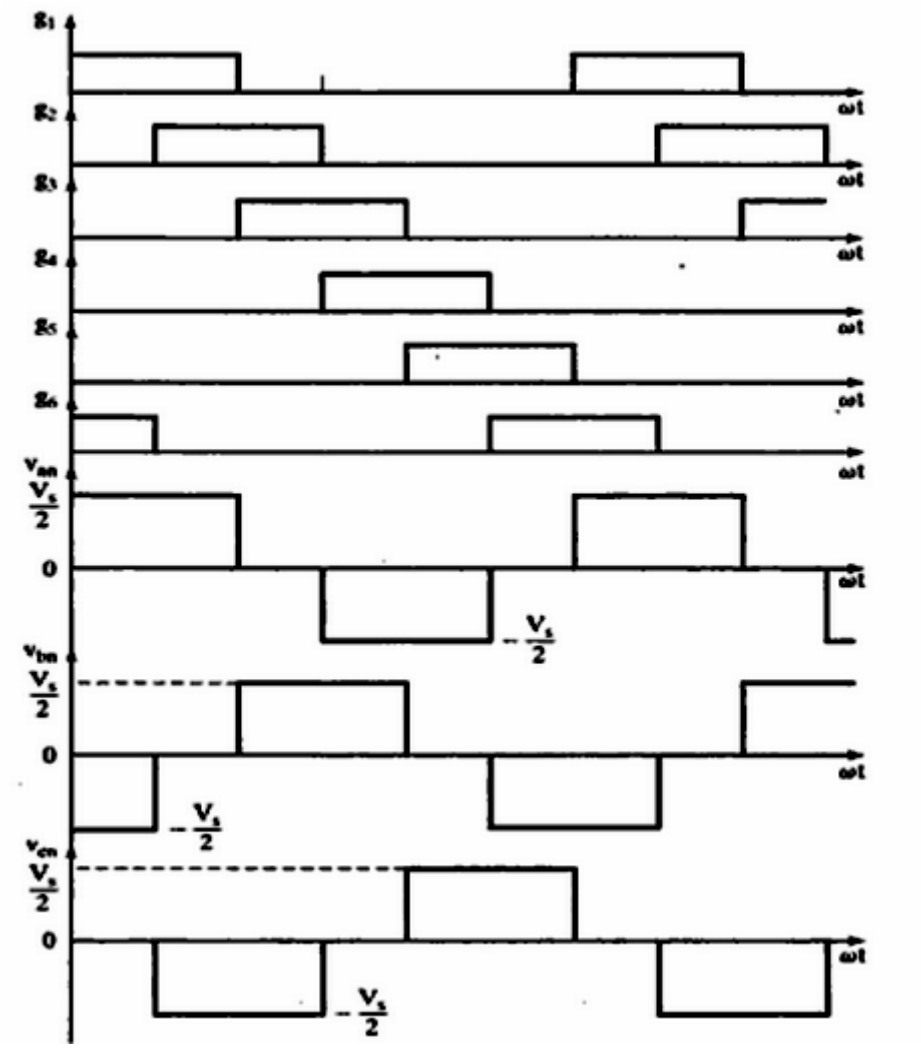

Fig-9.5: switching control signals and phase to phase voltage in 120^0 conduction three phase inverter.

EQUIPMENT REQUIRED

1. Mobile Workstation
2. Resistive Load
3. Inductive load
4. DC voltmeter/Ammeter
5. Power Supply
6. Power MOSFETs /IGBT
7. Enclosure/Power Supply
8. Connection Leads & Accessories
9. Chopper/Inverter Control Unit
10. Current/Voltage Isolator
11. Oscilloscope

PROCEDURE SUMMARY

In the first part of this experiment, you will set up in the Mobile Workstation the equipment required to carry out this exercise.

In the second part of this exercise, you will set up the circuit shown in fig- 9.1 and then fig-9.2 to observe the operation of a 180° conduction three-phase inverter built with six electronic switches. You will observe the switching control signals applied to the electronic switches.

A voltage isolator will be used to observe the waveform of the line-to-neutral voltage (phase voltage) at each of the three outputs of the 180°-modulation three-phase inverter. A current isolator will be used to observe the waveform of the current (line current) in each of the three outputs of the 180°-modulation three-phase inverter. You will vary the frequency of the switching control signals and the dc voltage at the inverter input to observe the effects these have on the frequency and amplitude of the phase voltage and line current.

In the third part of this exercise, you will set up the circuit shown in fig- 9.1 and then fig-9.2 to observe the operation of a 120°-modulation three-phase inverter built with six electronic switches. A voltage isolator will be used to observe the waveform of the line-to-neutral voltage (phase voltage) at each of the three outputs of the 120°-modulation three-phase inverter. A current isolator will be used to observe the waveform of the current (line current) in each of the three outputs of the 180°-modulation three-phase inverter. You will vary the frequency of the switching control signals and the dc voltage at the inverter input to observe the effects these have on the frequency and amplitude of the phase voltage and line current.

PROCEDURE:

1. Install the Enclosure Power Supply, the Resistive Load, inductive load, the Power Diodes modules, Power MOSFET / IGBTs , chopper-inverter control unit, oscilloscope, current voltage Isolator in the Mobile Workstation.
2. Set up the circuit shown in Fig-9.1. And connect resistive load according to data table-9.1.
3. Connect oscilloscope to the output via current voltage isolator.
4. Connect Multi-meter to measure output ac voltage.
5. Turn on the power supply and chopper inverter control unit. In chopper inverter control unit press select button to 180 positions. And take the reading according to data table-9.1.
6. Replace R load to R-L load. Turn on the power supply and take the reading according to data table-9.2.
7. For 120^0 conduction mode, press select button in chopper inverter control unit to 120^0 positions. Then take reading according to the data table-9.3.
8. Replace R load to R-L load. Then take reading according to data table-9.4.

Experimental Data:

Table -9.1: Data for three phase inverter (180^0 conduction) with R load:

R=2400 ohm.

No. Of obs.	Input voltage V_s(dc) [volt]	Output voltage & current ,V_{an}& I_a (wave shape)	Output voltage & current ,V_{bn}& I_b (wave shape)	Output voltage ,V_{an} (measured)	Output voltage ,V_{bn} (measured)	Frequency f (Hz)
1	100					
2						
3						
4	200					
5						
6						
7	300					
8						
9						

Table-9.2: Data for three phase inverter (180^0 conduction) with R-L load:

R=1200 ohm, L= 30.6H.

No. Of obs.	Input voltage V_s(dc) [volt]	Output voltage & current ,V_{an} & I_a (wave shape)	Output voltage & current ,V_{bn}& I_b (wave shape)	Output voltage ,V_{an} (measured)	Output voltage ,V_{bn} (measured)	Frequency f (Hz)
1	100					
2						
3						
4	200					
5						
6						
7	300					
8						
9						

Table -9.3: Data for three phase inverter (120^0 conduction) with R load:

R=2400 ohm.

No. Of obs.	Input voltage V_s(dc) [volt]	Output voltage & current ,V_{an}& I_a (wave shape)	Output voltage & current ,V_{bn}& I_b (wave shape)	Output voltage ,V_{an} (measured)	Output voltage ,V_{bn} (measured)	Frequency f (Hz)
1	100					
2						
3						
4	200					
5						
6						
7	300					
8						
9						

Table-9.4: Data for three phase inverter (120^0 conduction) with R-L load:

R=1200 ohm, L= 30.6H.

No. Of obs.	Input voltage V_s(dc) [volt]	Output voltage & current ,V_{an}& I_a (wave shape)	Output voltage & current ,V_{bn}& I_b (wave shape)	Output voltage ,V_{an} (measured)	Output voltage ,V_{bn} (measured)	Frequency f (Hz)
1	100					
2						
3						
4	200					
5						
6						
7	300					
8						
9						

Review Questions:

1. What is the phase shift between the waveforms of the phase voltage at the outputs of a 180^0-modulation three-phase inverter?
2. Describe the switching control signals used in a 180'-modulation three-phase inverter.

International Islamic University Chittagong (IIUC)
Department of Electrical & Electronic Engineering
Course Title –Power Electronics Sessional
Course No.-EEE-4706

Experiment no.10: To study the operation of Buck (Step-down) and Boost (Step-up) Chopper.

OBJECTIVE

• To become familiar with the Chopper.
• To observe the operation of Buck and Boost chopper.

THEORY

The buck (Step-down) chopper:

Transformers are of great importance in electric circuits because they allow voltage and current levels to be converted. However, transformers operate only with ac power. When dc voltage and current levels must be converted, choppers can be used. For example, a step-down transformer is normally used to convert an ac voltage into a lower ac voltage. With dc power, a similar conversion can be performed using a buck chopper.

Choppers use very fast electronic switches to convert dc voltages and currents from higher to lower levels and vice versa. The electronic switches can be designed with bipolar transistors, Insulated Gate Bipolar Transistor IGBT, metal-oxide semiconductor field-effect transistors (MOSFETs), diodes, thyristors, etc. Fig-6.1 shows a buck chopper built with an electronic switch (Q) and a diode (D).

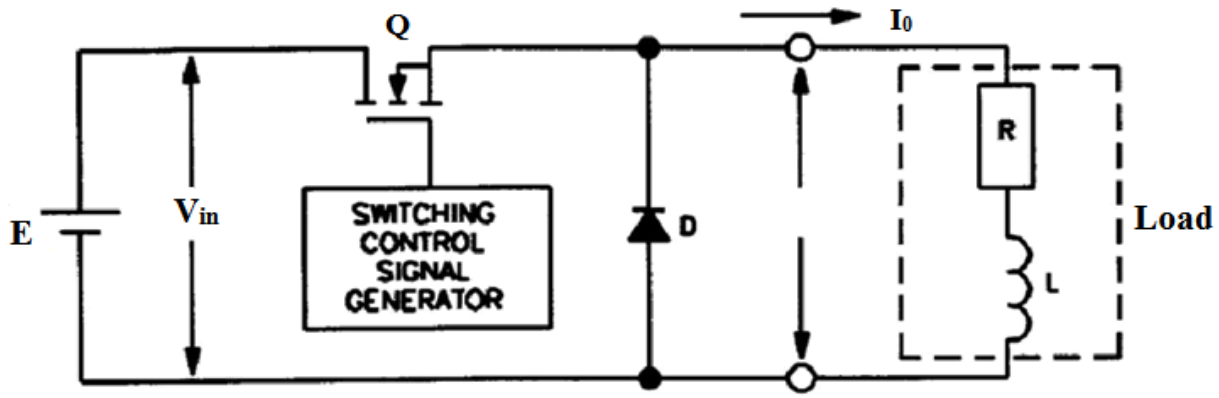

Fig-10.1: Buck (Step-down) Chopper circuit.

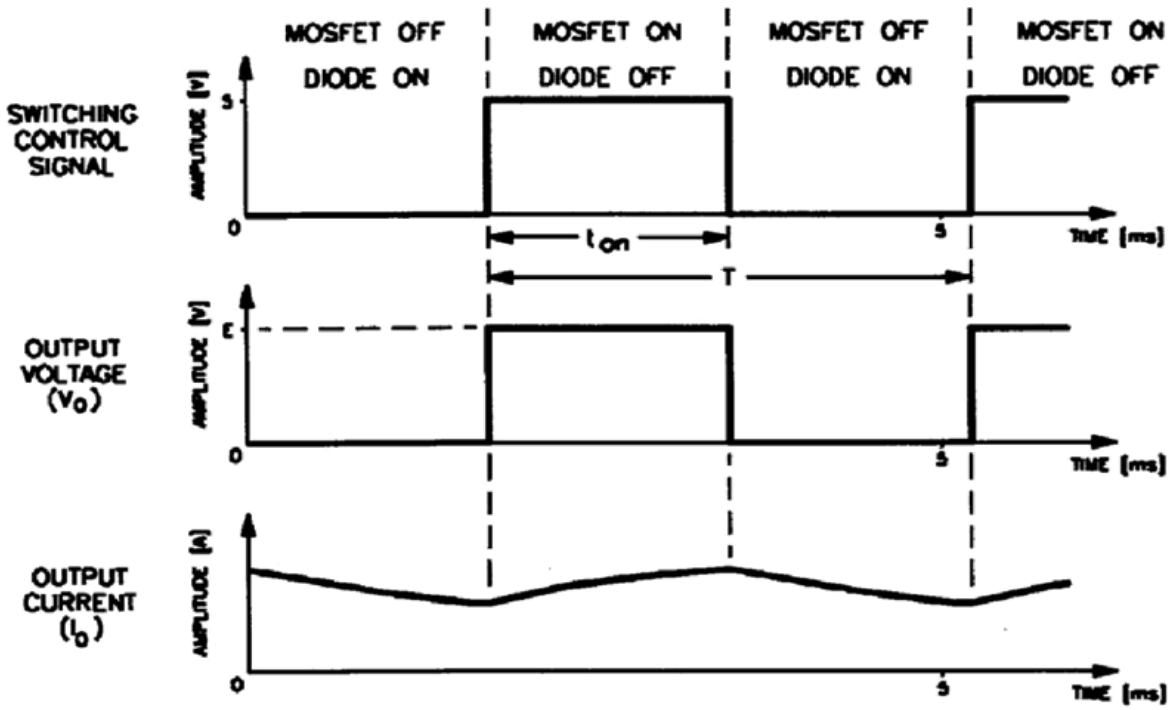

Fig-10.2: Switching control signal and Output waveforms of Buck Chopper.

When electronic switch Q switches on, the dc power supply voltage (V_{in},) is applied to the load, diode D automatically switches off, and the current flowing in the load (I_0) starts to increase. When electronic switch Q switches off, the dc power supply voltage is no longer applied to the load, diode D automatically switches on, and the current continues flowing in the load through diode D, but it starts to decrease. Diode D is usually referred to as a free-wheeling diode since it provides an alternative path for the load current, which continues to flow when electronic switch Q is off.

The dc voltage at the buck chopper output (V_0) is proportional to the dc voltage at the buck chopper input (V_{in}) and the time electronic switch Q is on during each cycle. This time, which is referred to as the on-time (t_{on}), is in turn proportional to the duty cycle K (t_{on}/T) of the switching control signal applied to the gate of electronic switch Q. The equation relating voltages V_O and V_1 is given by the expression:

$V_0 = V_{in} \times K$ ..... (10.1)

Where, K is the duty cycle.

The Boost (Step-up) chopper:

Transformers allow ac voltage and current levels to be converted. For example, a step-up transformer is normally used to convert an ac voltage into a higher ac voltage. With dc power, a similar conversion can be performed using a boost chopper. Fig-10.2 shows a boost chopper built with an electronic switch (Q) and a diode (D), and some waveforms related to this circuit. When electronic switch Q switches on, the voltage across its terminals becomes virtually null, the dc power supply voltage (V,) is applied to the inductor (L), and the current flowing in inductor L (I_L) starts to increase. Simultaneously, diode D switches off since it becomes reverse biased. At this moment, capacitor C starts to discharge into the load and both the output current (I_0) and voltage (V_0) start to decrease. When electronic switch Q switches off, the voltage across its terminals increases very rapidly until it reaches approximately V_0 + 0.7 V (due to inductor L). This applies a forward-bias voltage of approximately 0.7 V to diode D, which therefore switches on. At this moment, a current equal to I_L- I_0 starts to charge up capacitor C, and both V_0 and I_0 start to increase.

The dc voltage at the boost chopper output (V_0) is proportional to the dc voltage at the boost chopper input (V_{in}) and the time the electronic switch is on during each cycle. This time, which is referred to as the on-time (t_{on}), is in turn proportional to the duty cycle K (t_{on}/T) of the switching control signal applied to the gate of electronic switch Q. The equation relating voltages V_0 and V_{in} is given by the expression:

$$V_0 = V_{in} / (1 - K) \quad \text{.....} \quad (10.2)$$

Where, K is the duty cycle.

Thus, voltage V_0 can be varied by varying the duty cycle. This equation indicates that voltage V_0 can range between voltage V_{in}, and an infinite voltage when the duty cycle varies between 0 and 1. In practice, however, the duty cycle or only approaches 0 and 1. Therefore, voltage V_0 can vary between a voltage a little higher than voltage V_{in} and many times voltage V_{in}. In certain circuits, however, the maximum value of the duty cycle must be limited to limit the maximum voltage the boost chopper can produce.

Varying the frequency of the switching control signal while maintaining the duty cycle constant does not vary the dc voltage and current at the boost chopper out- put (V_0 and I_0).

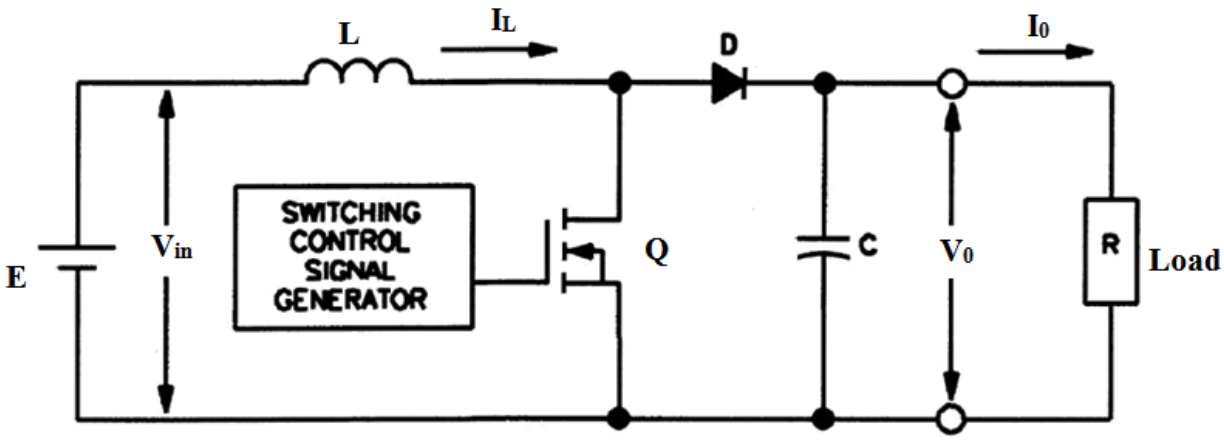

Fig-10.3: Boost (Step-up) Chopper circuit.

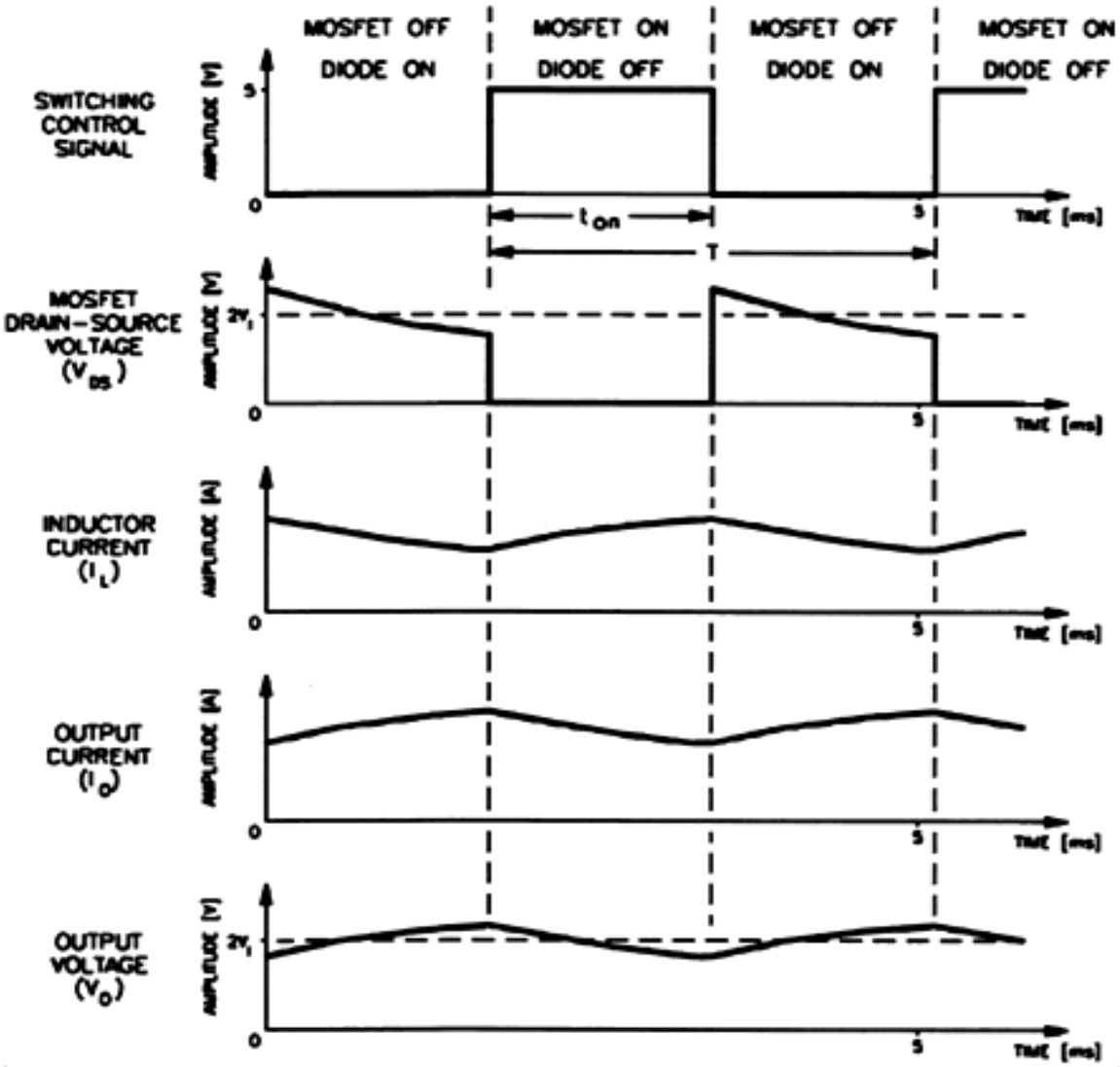

Fig-10.4: Switching control signal Output waveforms of Boost Chopper.

Procedure summary:

In the first part of this exercise, you will set up in the Mobile Workstation the equipment required to carry out this exercise.

In the second part of this exercise, you will use the circuit shown in Fig-10.1 to observe the operation of a buck chopper. In this circuit, the output of the buck chopper is connected to a current-type load consisting of resistor R and inductor L . A voltage isolator and a current isolator will allow you to observe the waveforms of the voltage and current at the buck chopper output.

You will vary the duty cycle of the switching control signal while observing the dc voltage and current at the buck chopper output. This will allow you to verify the relationship between the duty cycle and the value of the dc voltages at the buck chopper input and output, and to determine the direction of power flow.

In the third part of this exercise, you will vary the frequency of the switching control signal while observing the dc voltage and current, as well as the current waveform, at the buck chopper output. This will allow you to observe the effect of frequency on these parameters.

In the fourth part of this exercise, you will use the circuit shown in Figures 10.3 to observe the operation of a boost chopper. The only difference in these figures is the location of the dc voltmeter. In this circuit, the boost chopper output is connected to a resistive load. A voltage isolator and a current isolator will allow you to observe the waveform of the voltage at the boost chopper output and the waveform of the current at the boost chopper input.

You will vary the duty cycle of the switching control signal while observing the dc voltage and current at the boost chopper output. This will allow you to verify the relationship between the duty cycle and the dc voltage at the boost chopper input and output, and to determine the direction of power flow.

In the fifth part of this exercise, you will vary the frequency of the switching control signal while observing the dc voltage and current, as well as the voltage waveform, at the boost chopper output. This will allow you to verify the effect of frequency on these parameters.

EQUIPMENTS REQUIRED

1. Mobile Workstation Mobile Workstation.
2. Resistive Load.
3. Inductive load.
4. DC voltmeter/Ammeter.
5. Power Supply.
6. MOSFET Chopper/Inverter.
7. IGBT Chopper/Inverter.
8. Enclosure/Power Supply.
9. Connection Leads & Accessories.
10. Chopper/Inverter Control Unit.
11. Current/Voltage Isolator.

PROCEDURE

1. Install the Power Supply, the Enclosure / Power Supply, the Chopper/Inverter, the Smoothing inductors, the DC Voltmeter/Ammeter, and the Resistive Load modules in the Mobile Workstation.
2. Install the Chopper /inverter Control Unit and the Current/Voltage isolators in the Enclosure/Power Supply.
3. Make sure that the main power switch of the Power Supply is set to the O (OFF) position. Connect the Power Supply to a three-phase wall receptacle.
4. On the Power Supply, set the 24-V ac power switch to the I (ON) position.
5. Make sure that the toggle switches on the Resistive Load module are all set to the O (open) position.
6. Connect the modules as shown in Figure 10.1. (Buck Chopper).
7. On the Chopper / Inverter Control Unit, slowly change the DC SOURCE 1 control knob to change the duty cycle of the switching control signal. Vary the duty cycle according to data table-1. Observe the output voltage and current.
8. On the Chopper / Inverter Control Unit, slowly change the DC SOURCE 2 control knob to change the frequency of the switching control signal. Observe the output voltage and current according to data table-1.
9. Now connect the modules as shown in Figure 10.3.(Boost Chopper).
10. On the Chopper / Inverter Control Unit, slowly change the DC SOURCE 1 control knob to change the duty cycle of the switching control signal. Vary the duty cycle according to data table-2. Observe the output voltage and current.
11. On the Chopper / Inverter Control Unit, slowly change the DC SOURCE 2 control knob to change the frequency of the switching control signal. Observe the output voltage and current according to data table-2.

Experimental Data:

Table-10.1: Data for Buck (step-down) Chopper:

E =100V (dc)[volt], R= 1200Ω, L= 15.3H

No. Of obs.	Switching control signal wave shape	Duty cycle K (%)	Frequency f (KHz)	Output voltage V_0 (Wave shape)	Output voltage V_0 (dc) [volt] (measured)	Output voltage V_0 (dc) [volt] (Calculated)	Output current (wave shape)	Output current (measured)
1		5						
2		20						
3		30						
4		50						
5		70						
6		95						
7								
8		50						
9								
10								

Table-10.2: Data for Boost (step-up) Chopper:

E =100V (dc)[volt], R= 2400Ω.

No. Of obs.	Switching control signal wave shape	Duty cycle K (%)	Frequency f (KHz)	Output voltage V_0 (Wave shape)	Output voltage V_0 (dc) [volt] (measured)	Output voltage V_0 (dc) [volt] (Calculated)	Output current (wave shape)	Output current (measured)
1		5						
2		20						
3		30						
4		50						
5		70						
6		95						
7								
8		50						
9								
10								

Review Questions:

1. A buck chopper is powered by a 300-V dc power supply. What is the output voltage range of this chopper if the duty cycle can vary between 5 and 95%?
2. Briefly describe the operation of the buck chopper.
3. Explain why a diode is connected across the output terminals of a buck chopper.
4. Describe the effects the switching control signal frequency has on the output voltage and current of a Buck Chopper. Explain.
5. Describe the effect the switching control signal frequency has on the output voltage and current of a boost chopper. Explain.
6. A boost chopper is powered by a 12V dc power supply. What is the output voltage range of this chopper if the duty cycle can vary between 20 and 95%?
7. Briefly describe the operation of the boost chopper.
8. Explain why the maximum value of the duty cycle must be limited in certain boost choppers.