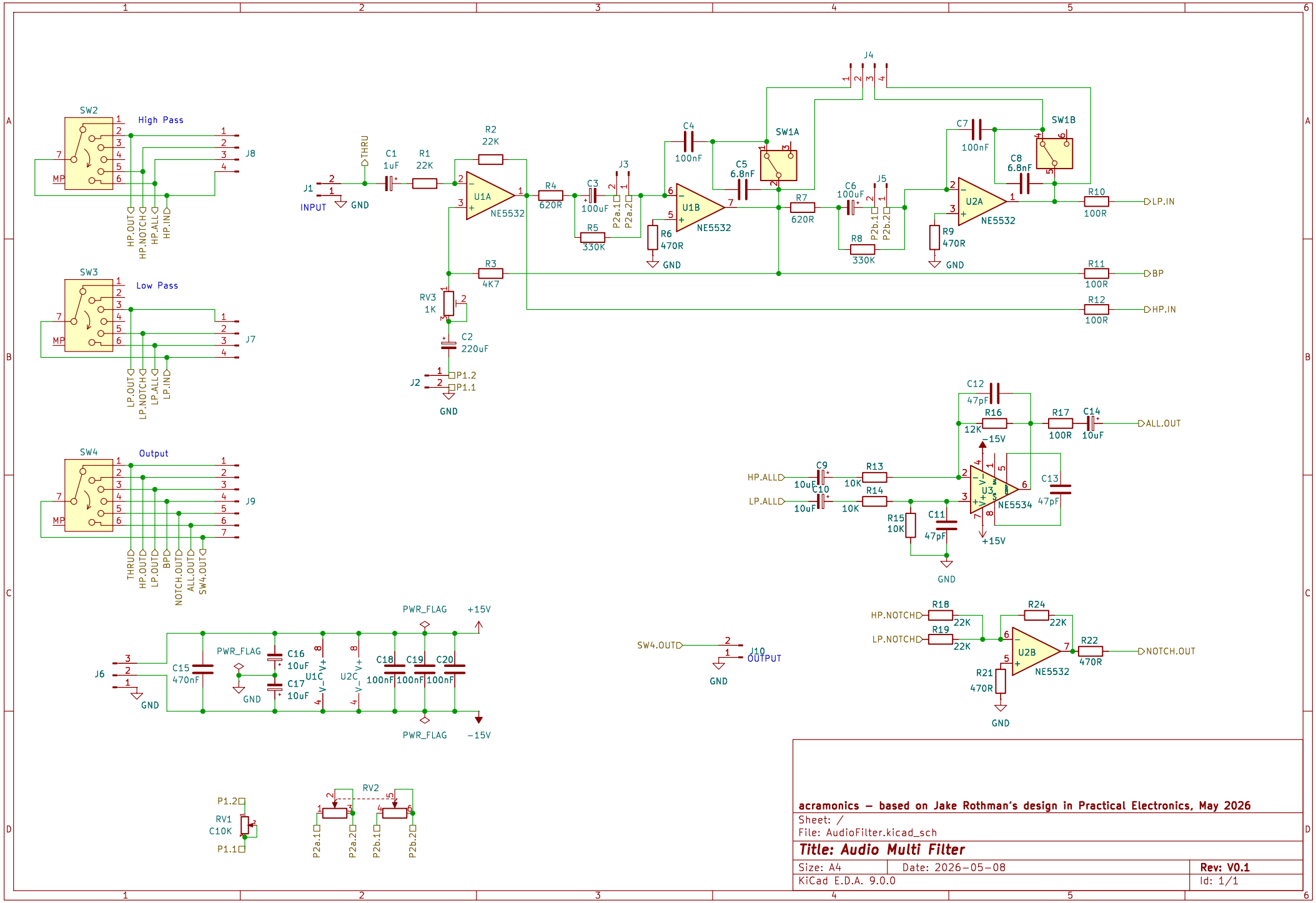


**acramonics – based on Jake Rothman's design in Practical Electronics, May 2026**

Sheet: /
File: AudioFilter.kicad_sch

**Title: Audio Multi Filter**

| | | |
|---|---|---|
| Size: A4 | Date: 2026-05-08 | **Rev: V0.1** |
| KiCad E.D.A. 9.0.0 | | Id: 1/1 |