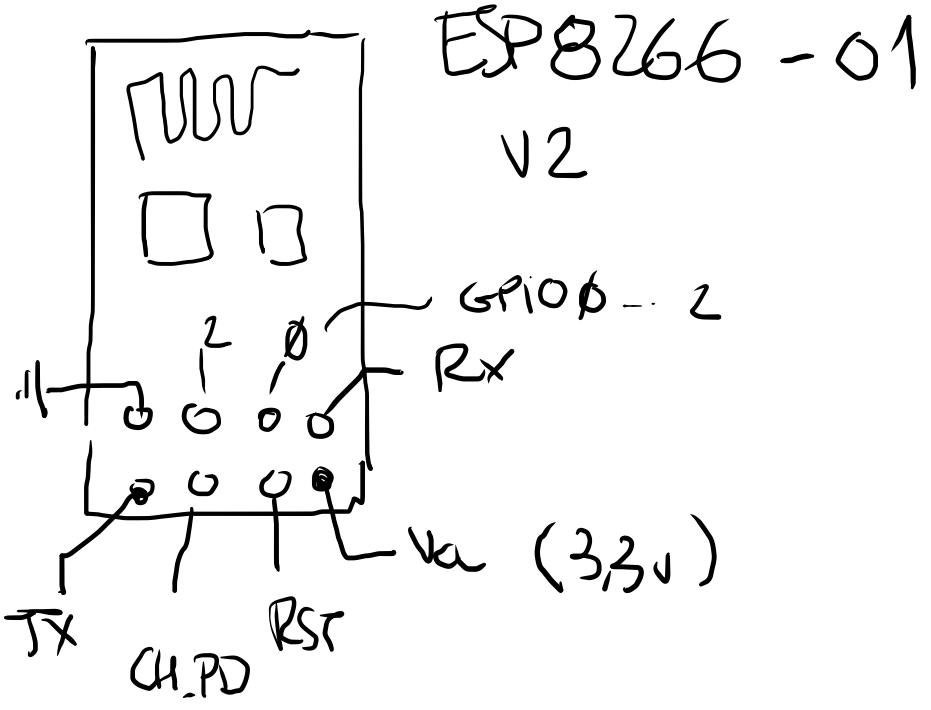
ESP8266-01
V2
GPIO0 - 2
2
0
Rx
Vcc (3,3V)
TX
CH_PD
RST

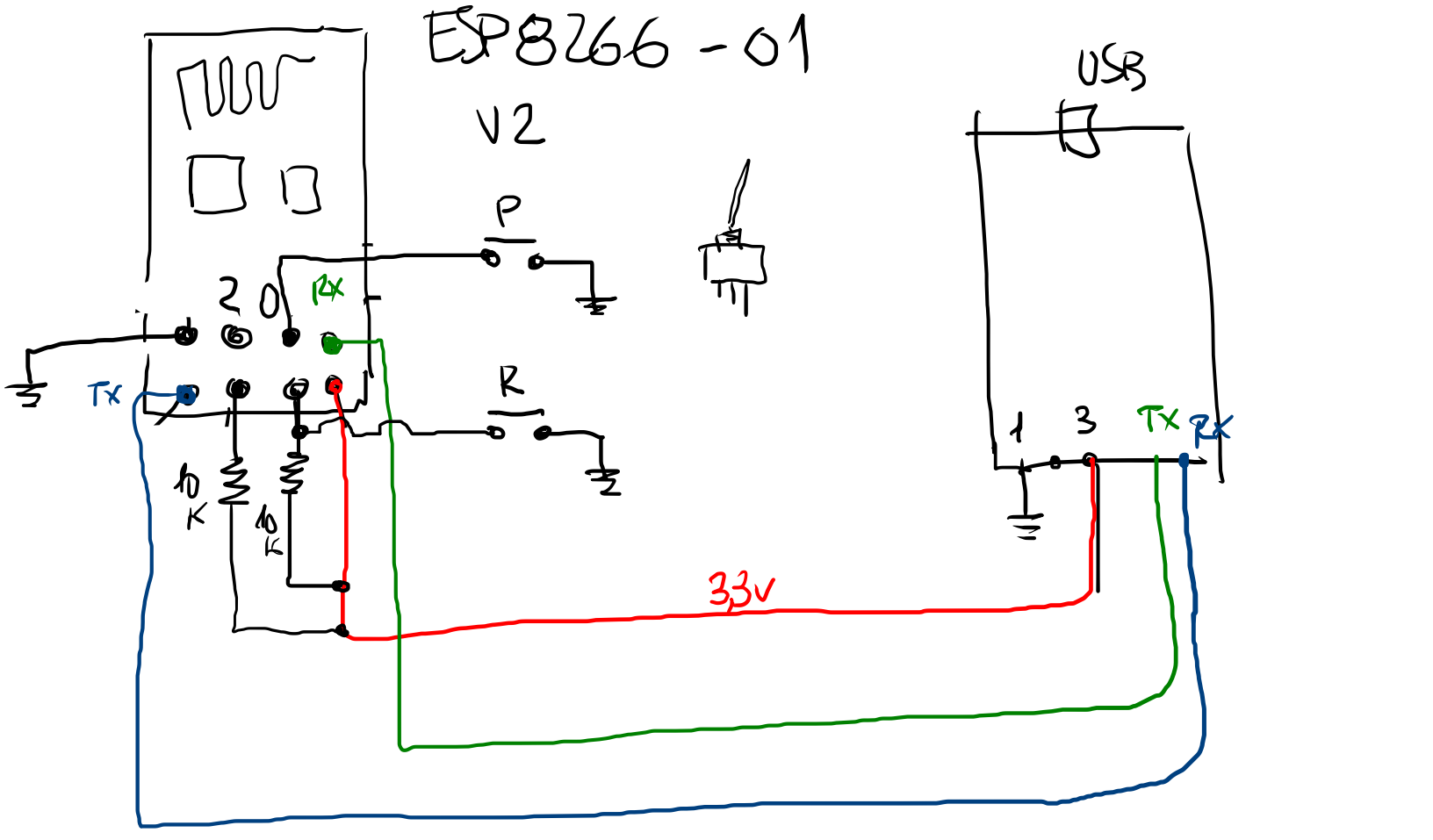
ESP8266-01
V2
USB
P
R
2
0
Rx
Tx
10 K
10 K
1
3
Tx
Rx
3,3V

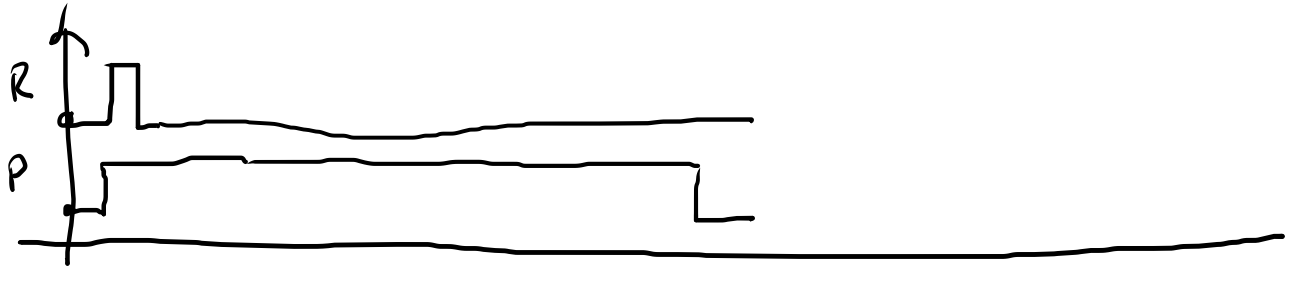
R
P

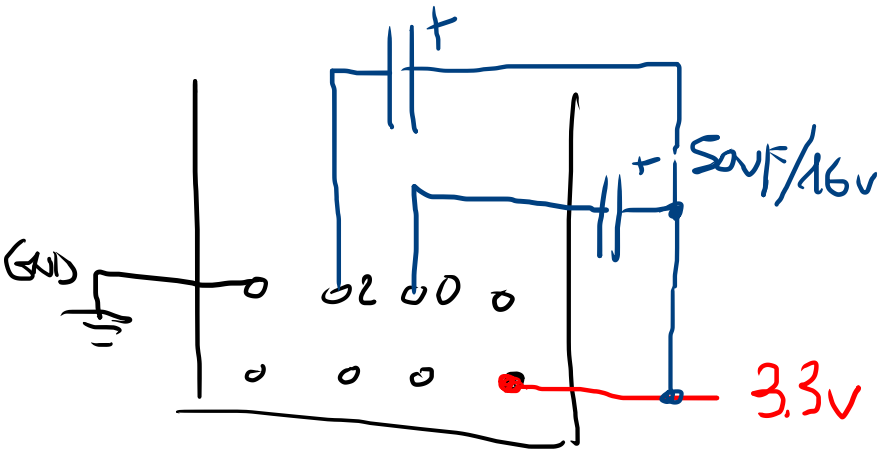
+
+
50uF/16v
GND
3.3v