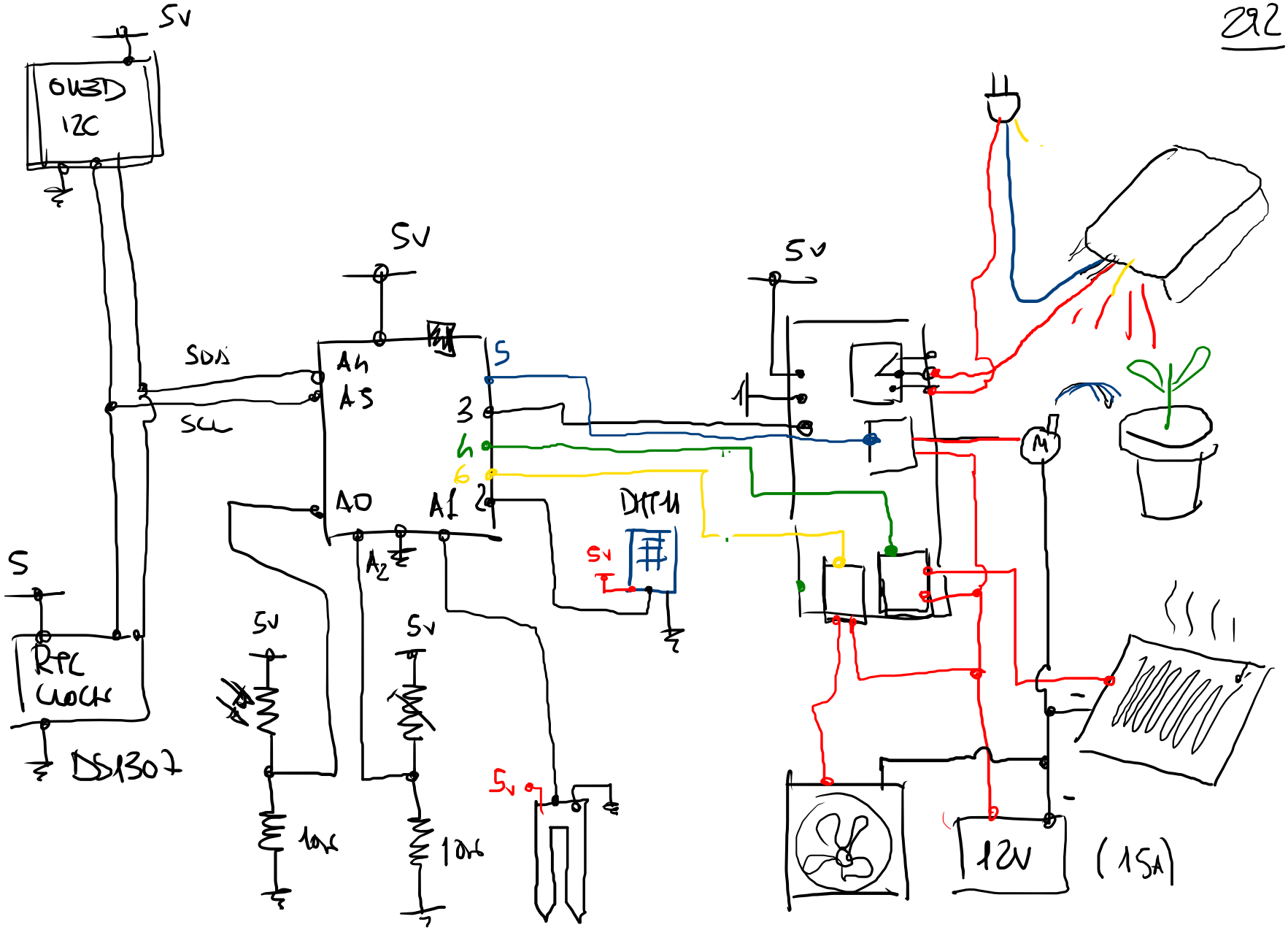
5V
OLED
I2C
SDA
SCL
5V
A4
A5
A0
A1
A2
5
3
4
6
2
5V
DHT11
5V
5V
RTC
CLOCK
DS1307
10K
10K
5V
M
12V
(15A)