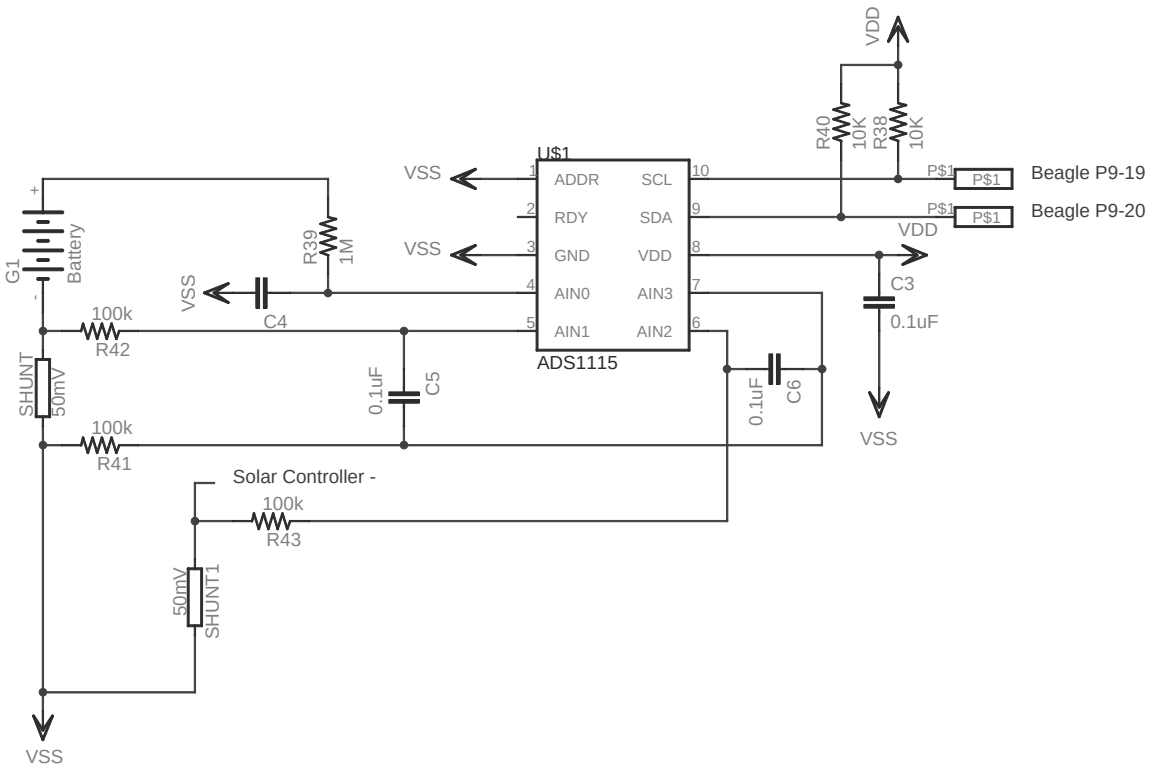

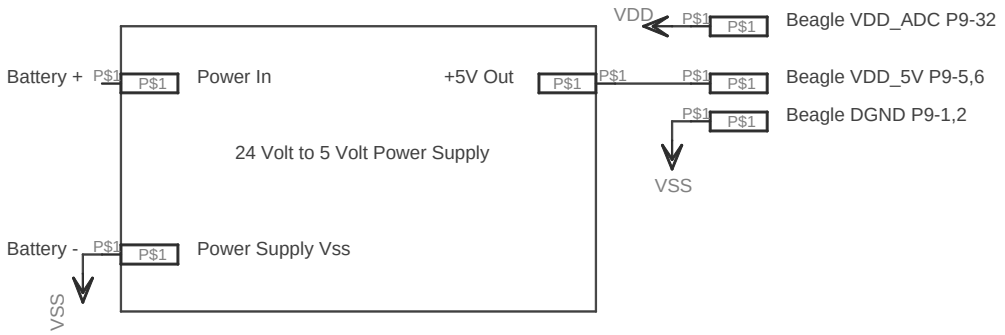

Battery Monitor https://github.com/simat/BatteryMonitor (C) Simon Matthews

This work is licensed under the Creative Commons Attribution-ShareAlike 4.0 International License.

To view a copy of this license, visit http://creativecommons.org/licenses/by-sa/4.0/.

Date: 3/11/2017 05:19:41	Rev:
TITLE: BMSsingle	Sheet: 1/1