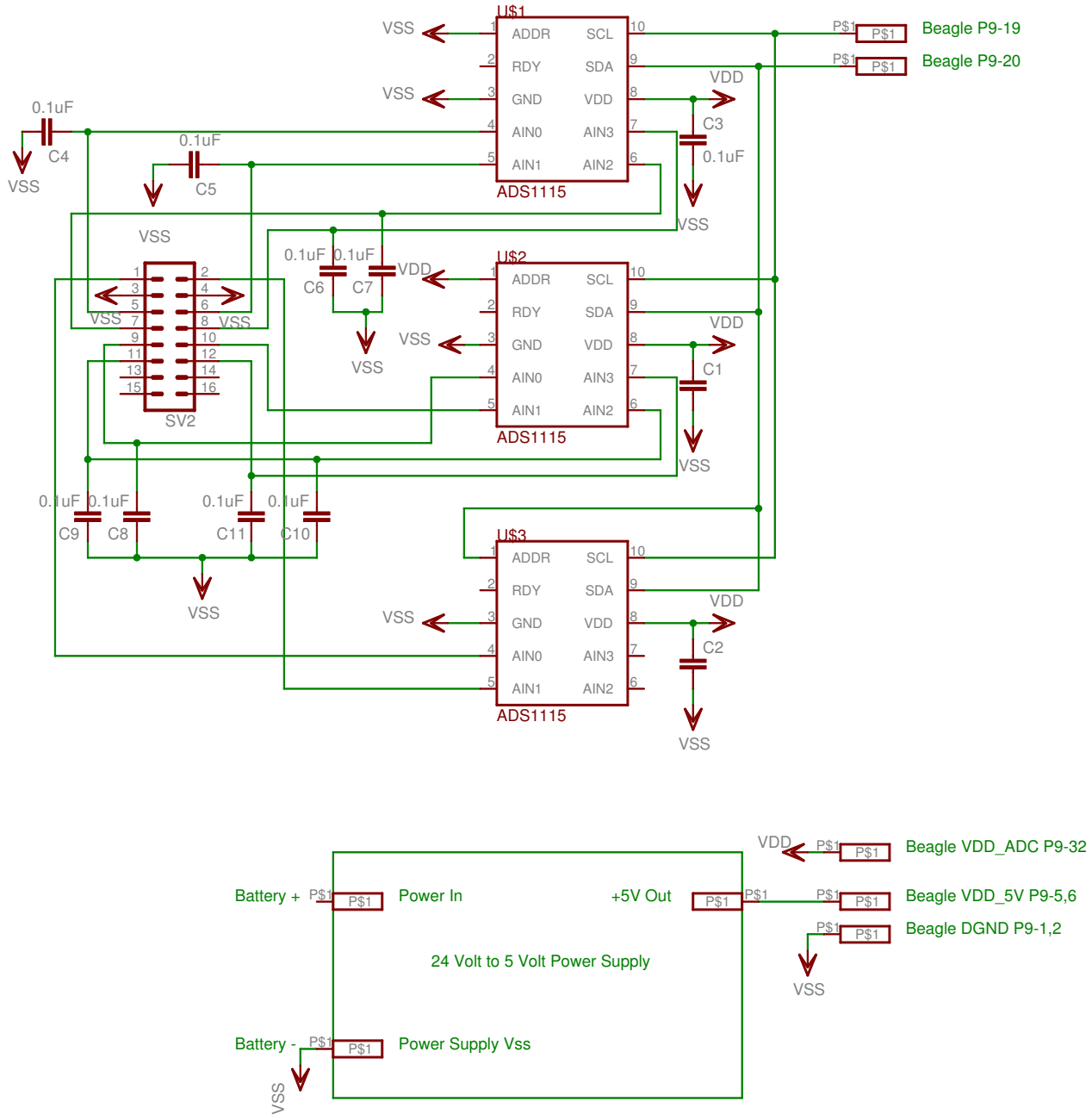

Battery Monitor https://github.com/simat/BatteryMonitor (C) Simon Matthews

This work is licensed under the Creative Commons Attribution-ShareAlike 4.0 International License.

To view a copy of this license, visit http://creativecommons.org/licenses/by-sa/4.0/.

Date: 10/15/2014 20:57:46	Rev:
TITLE: BMS	Sheet: 2/3