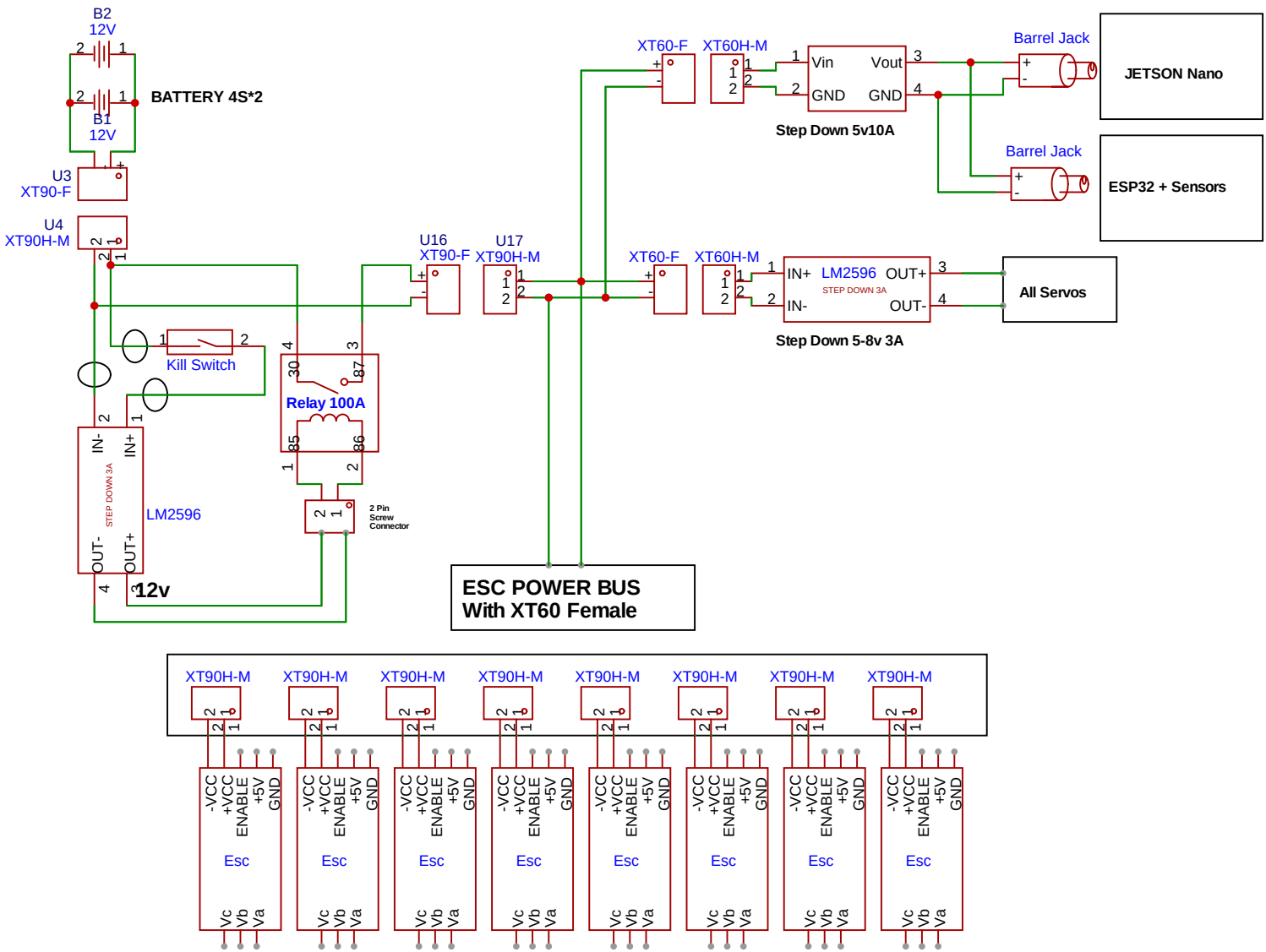

TITLE:		REV: 1.0
EasyEDA	Company: Synerbotics	Sheet: 1/1
	Date: 2025-01-23 Drawn By: Nainaiu Rakhaine	