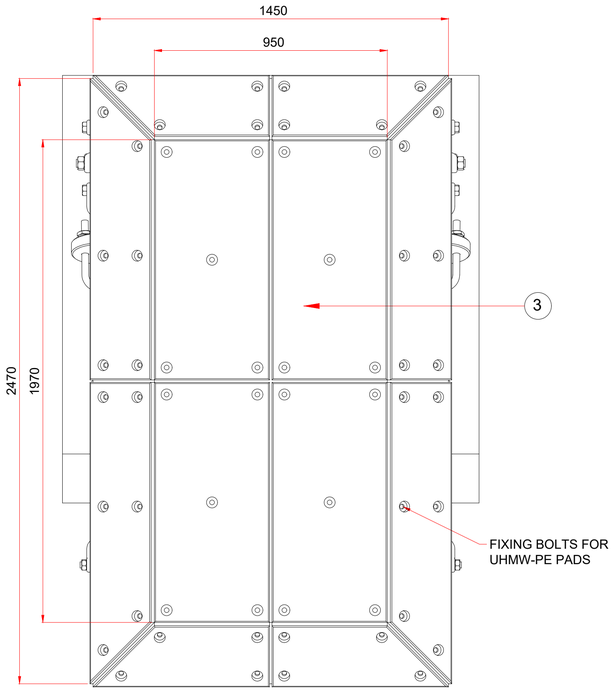

AMCF600 CONE FENDER ELEVATION
SCALE : 1:80

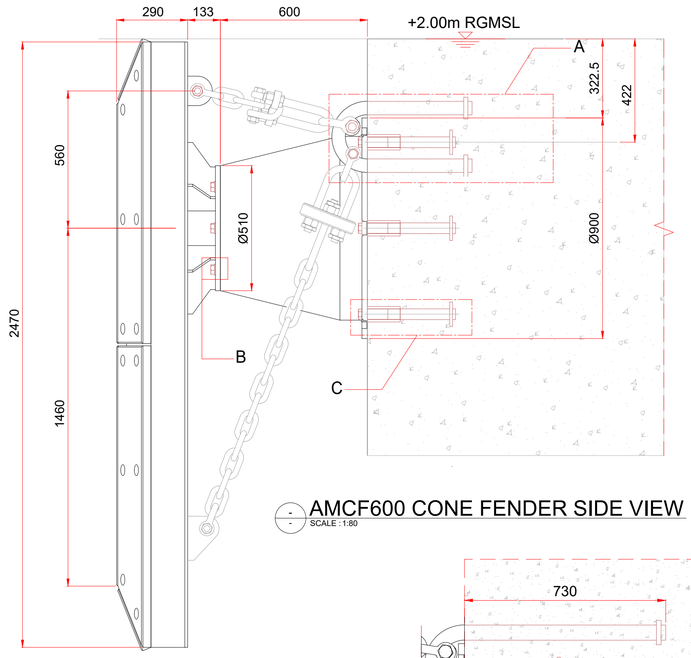

AMCF600 CONE FENDER SIDE VIEW
SCALE : 1:80

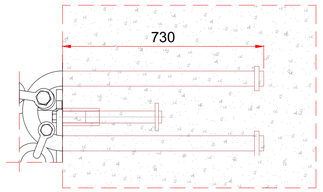

DETAIL-A
SCALE : NTS

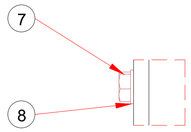

DETAIL-B
SCALE : NTS

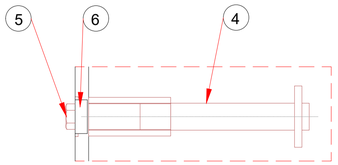

DETAIL-C
SCALE : NTS

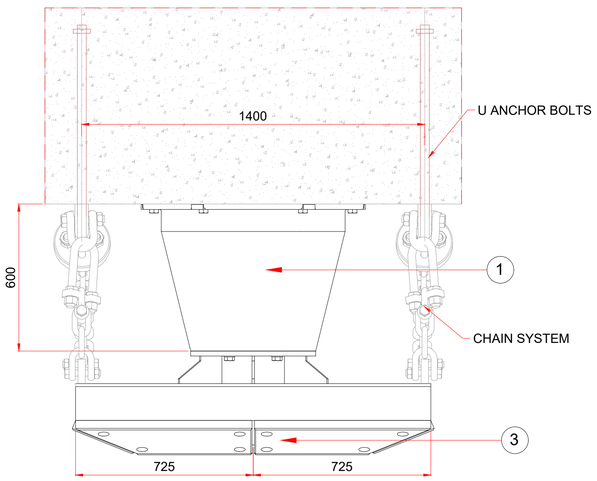

AMCF600 CONE FENDER TOP VIEW
SCALE : 1:80

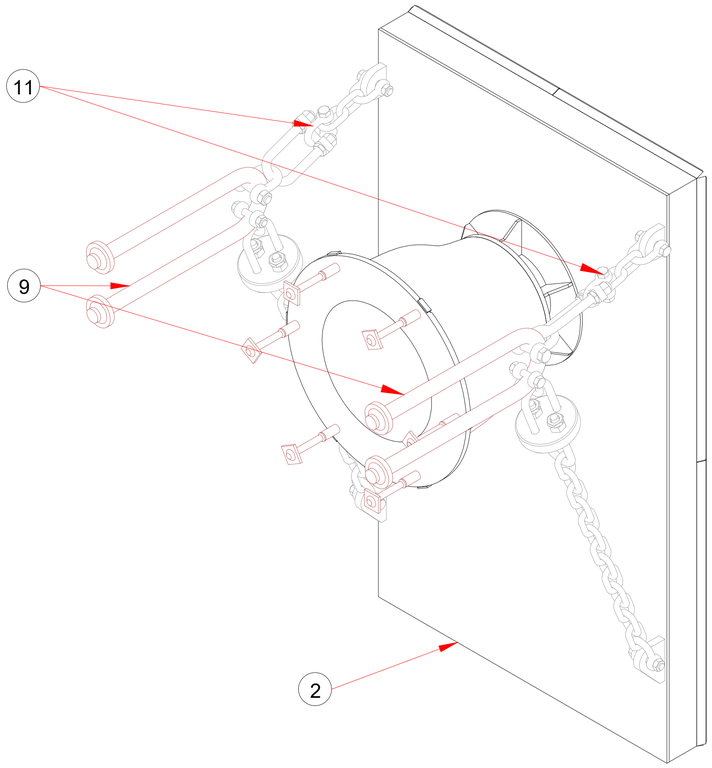

AMCF600 CONE FENDER ISOMETRIC BACK VIEW
SCALE : NTS

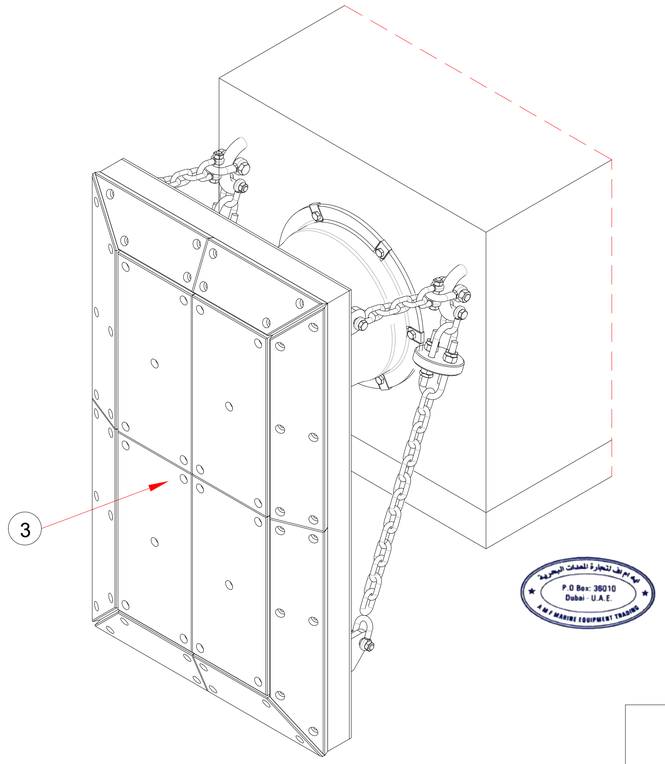

AMCF600 CONE FENDER ISOMETRIC FRONT VIEW
SCALE : NTS

GENERAL NOTES

1. ALL INDICATED COORDINATES ARE IN WGS-84-UTM40N COORDINATE SYSTEM.
2. ALL LEVELS ARE IN PROJECT DATUM - RGMSL.
3. ALL DIMENSIONS ARE IN METERS (m) - UNLESS NOTED OTHERWISE.
4. DO NOT SCALE OFF OF DRAWINGS.

DRAWING REFERENCE NO.

2500-132-VP-9100-01202	C00	IFC-FENDER AND FIXING DETAIL
6200-203-VP-9100-01202	C02	SD-FENDER AND FIXING DETAIL
6200-203-V4-3400-00003	006	MAR-RUBBER FENDER IN BREASTING DOLPHINS

S.N	DESCRIPTION	MATERIAL	QTY
1	AMCF600 FENDER	Q235, RUBBER	01
2	STEEL PANEL	Q355 PAINTED	01
3	FACIA PAD (40 THK.)	UHMW-PE	01 SET
4	M24 CAST IN ANCHOR	SS 316 OR EQUIVALENT	06
5	M24 X 45L BOLT	SS 316 OR EQUIVALENT	06
6	L-TYPE WASHER	SS 316 OR EQUIVALENT	06
7	M24 X 45L BOLT	SS 316 OR EQUIVALENT	06
8	M24 ROUND WASHER	SS 316 OR EQUIVALENT	06
9	U ANCHOR	SS 316 OR EQUIVALENT	02
10	Ø22 TENSION CHAIN SYSTEM	CM490,Q235,45# HDG	02
11	Ø22 WEIGHT CHAIN SYSTEM	CM490,Q235,45# HDG	02

PERFORMANCE OF THE FENDER AMCF600 :

RATED ENERGY ABSORPTION : 79.6 KN-M
RATED REACTION FORCE : 237 KN
RATED DEFLECTION : 70%
TOLERANCE : ±10%

PANEL COATING SPECIFICATION :

BLASTING : SSPC.SP10 / SIS SA2.5 1ST
COAT : HEMPEL 15341 - 50 MICRONS 2ND
COAT : HEMPEL 45880 - 200 MICRONS 3RD
COAT : HEMPEL 45880 - 200 MICONS
TOTAL DFT : 450 MICRONS MINIMUM

PERFORMANCE TOLERANCE : ENERGY -10%, REACTION +10%
DIMENSIONAL TOLERANCE : ±3% OR ± 2MM HOLE SPACING
TOLERANCE : ±4MM (NON CUMULATIVE)

CONTRACTOR'S VERIFICATION STAMP

WE, [TRV], VERIFY THAT THIS CONTRACTOR'S DOCUMENT

- HAS BEEN PRODUCED AND CHECKED IN ACCORDANCE WITH CONTRACTOR'S QUALITY ASSURANCE PLAN
- IS OF A STANDARD THAT WILL ENABLE THE EMPLOYER TO ACCEPT IT IN ACCORDANCE WITH THE CONTRACT
- COMPLIES WITH ALL REQUIREMENTS OF THE CONTRACT

FOLLOWING DEVIATIONS TO CONTRACT ARE REFERENCED FOR WHICH A DISPENSATION HAS BEEN ACCEPTED BY THE EMPLOYER:

OTHER RELATED LETTERS / RFI WHICH DOCUMENT CLARIFICATIONS ASSOCIATED WITH THIS DOCUMENT ARE LISTED BELOW:

AS BUILT

CONTRACTOR'S PROJECT MANAGER:
F.SOLER — PRINT NAME
SIGNATURE
12-05-2023 — DATE

DOCUMENT STATUS STAMP

CODE 1	WORK MAY PROCEED
CODE 2	REVISE & RESUBMIT. WORK MAY PROCEED SUBJECT TO INCORPORATION OF COMMENTS INDICATED
CODE 3	REVISE & RESUBMIT. WORK MAY NOT PROCEED
CODE 4	REVIEW NOT REQUIRED. WORK MAY PROCEED

THE STATEMENT "WORK MAY PROCEED" APPLIES TO THE FOLLOWING WORK ACTIVITIES ASSOCIATED WITH THE MATTERS CONTAINED WITHIN THE CONTRACTOR'S DOCUMENT:
DESIGN / PROCUREMENT / CONSTRUCTION / ALL * ACTIVITIES

ANY REVIEW, COMMENT OR ACCEPTANCE BY EMPLOYER UNDER THIS CONTRACT WITH RESPECT TO ANY OF CONTRACTOR'S DOCUMENTS SHALL NOT IN ANY WAY BE, OR DEEMED TO BE, AN APPROVAL OF ANY WORKS OR AN ACCEPTANCE THAT THE CONTRACTOR'S DOCUMENTS MEET THE REQUIREMENTS OF THE CONTACT, AS CONTRACTOR HAS THE SOLE RESPONSIBILITY FOR PERFORMING THE WORKS IN ACCORDANCE WITH THE REQUIREMENTS OF THIS CONTRACT.

AD PORTS GROUP	APPROVAL CODE	DATE

Rev	Date	Description	Drawn	Chkd	Appr
A00	12-05-23	AB - Issued For Approval	MAK	E.S	F.S

Drawn by / Date	Checked by / Date	Approved by / Date
M.A.K 12-05-2023	E.S 12-05-2023	F.S 12-05-2023

Client: مجموعة موانئ أبوظبي AD PORTS GROUP

Contract No. & Project Title
MARINE WORKS FOR ABU DHABI MARITIME PROJECTS
CONTRACT NO. 6200-203

Independent Checking Engineer
Signature

Contractor: rover UAE

Sub Contractor: AMF MARINE EQUIPMENT TRADING
FLOOR #17 I PRIME TOWER, AL ABRAJ STREET I BUSINESS BAY
P.O Box 36010 Dubai, UAE T: +971 4 5598036 I F: +971 4 5579532
E: info@amf-marine.com I W: www.amf-marine.com

Drawing Title
AL ALYA FERRY TERMINAL
FENDER AND FIXING DETAILS

Sheet	Scale	Paper Size
1 OF 1	AS SHOWN	A1

Drawing Status: AS BUILT DRAWING

Drawing No.	Revision
6200-203-VP-9100-01202	A00

DO NOT SCALE FROM THIS DRAWING

UNCONTROLLED IF PRINTED

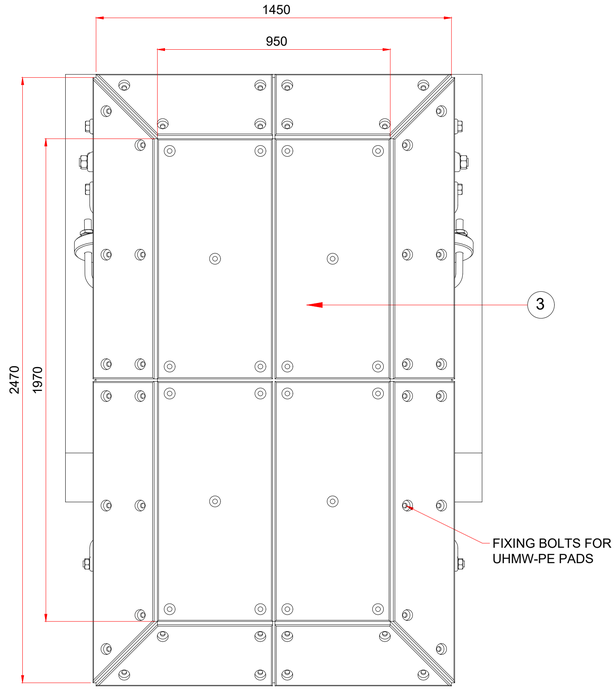

AMCF600 CONE FENDER ELEVATION
SCALE : 1:80

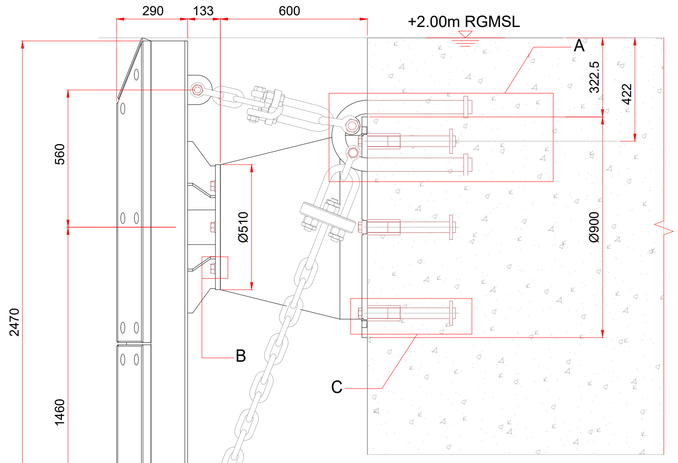

AMCF600 CONE FENDER SIDE VIEW
SCALE : 1:80

GENERAL NOTES

1. ALL INDICATED COORDINATES ARE IN WGS-84-UTM40N COORDINATE SYSTEM.
2. ALL LEVELS ARE IN PROJECT DATUM - RGMSL.
3. ALL DIMENSIONS ARE IN METERS (m) - UNLESS NOTED OTHERWISE.
4. DO NOT SCALE OFF OF DRAWINGS.

DRAWING REFERENCE NO.

2500-132-VP-9100-01202	C00	FENDER AND FIXING DETAIL
6200-203-V4-3400-00003	006	MAR-RUBBER FENDER IN BREASTING DOLPHINS

S.N	DESCRIPTION	MATERIAL	QTY
1	AMCF600 FENDER	Q235, RUBBER	01
2	STEEL PANEL	Q355 PAINTED	01
3	FACIA PAD (40 THK.)	UHMW-PE	01 SET
4	M24 CAST IN ANCHOR	SS 316 OR EQUIVALENT	06
5	M24 X 45L BOLT	SS 316 OR EQUIVALENT	06
6	L-TYPE WASHER	SS 316 OR EQUIVALENT	06
7	M24 X 45L BOLT	SS 316 OR EQUIVALENT	06
8	M24 ROUND WASHER	SS 316 OR EQUIVALENT	06
9	U ANCHOR	SS 316 OR EQUIVALENT	02
10	Ø22 TENSION CHAIN SYSTEM	CM490,Q235,45# HDG	02
11	Ø22 WEIGHT CHAIN SYSTEM	CM490,Q235,45# HDG	02

PERFORMANCE OF THE FENDER AMCF600 :

RATED ENERGY ABSORPTION : 79.6 KN-M
RATED REACTION FORCE : 237 KN
RATED DEFLECTION : 70%
TOLERANCE : ±10%

PANEL COATING SPECIFICATION :

BLASTING : SSPC.SP10 / SIS SA2.5 1ST
COAT : HEMPEL 15341 - 50 MICRONS 2ND
COAT : HEMPEL 45880 - 200 MICRONS 3RD
COAT : HEMPEL 45880 - 200 MICONS
TOTAL DFT : 450 MICRONS MINIMUM

PERFORMANCE TOLERANCE : ENERGY -10%, REACTION +10%
DIMENSIONAL TOLERANCE : ±3% OR ± 2MM HOLE SPACING
TOLERANCE : ±4MM (NON CUMULATIVE)

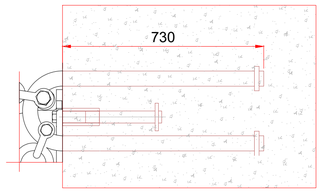

DETAIL-A
SCALE : NTS

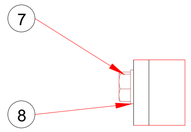

DETAIL-B
SCALE : NTS

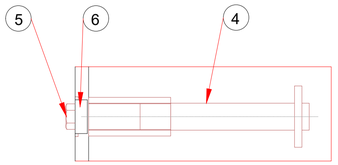

DETAIL-C
SCALE : NTS

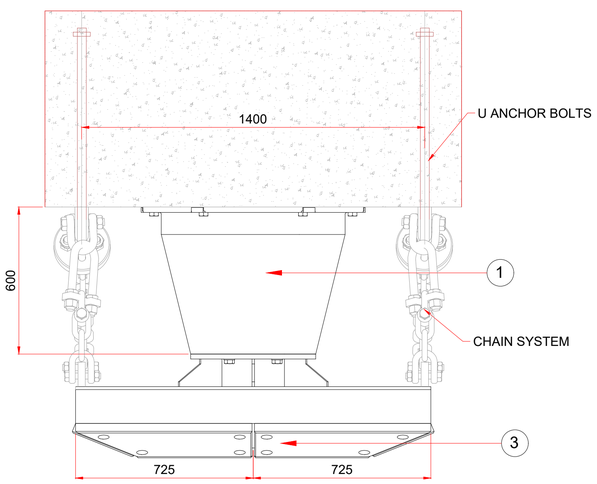

AMCF600 CONE FENDER TOP VIEW
SCALE : 1:80

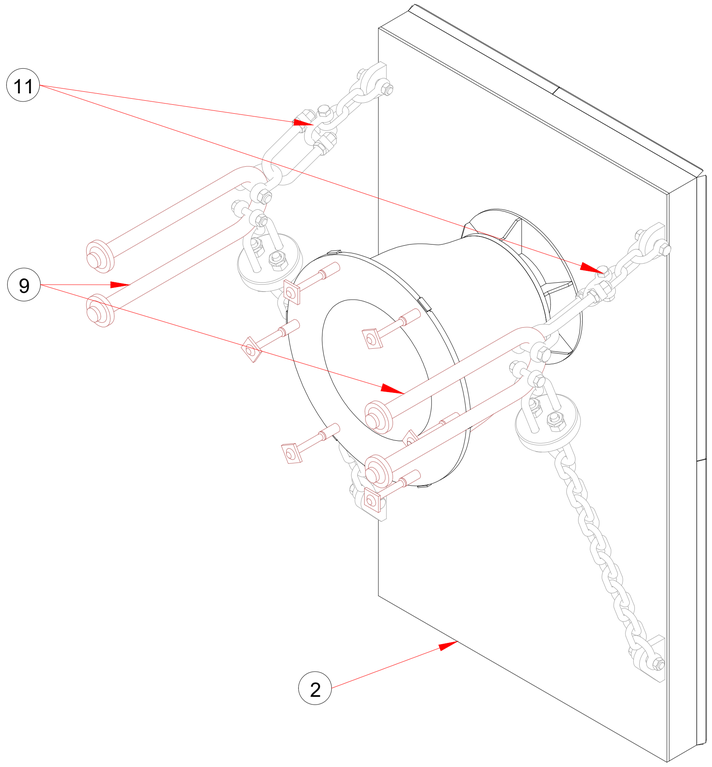

AMCF600 CONE FENDER ISOMETRIC BACK VIEW
SCALE : NTS

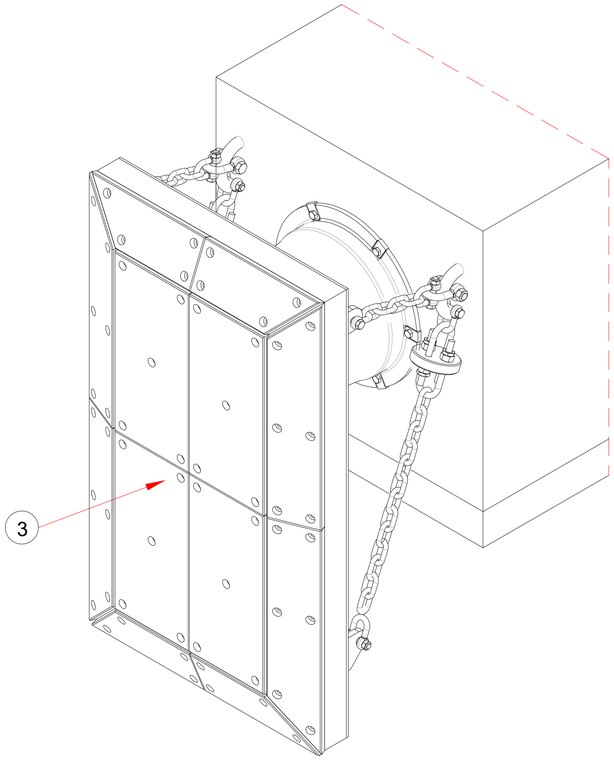

AMCF600 CONE FENDER ISOMETRIC FRONT VIEW
SCALE : NTS

UNCONTROLLED IF PRINTED

DO NOT SCALE FROM THIS DRAWING

CONTRACTOR'S VERIFICATION STAMP

WE, [TRV], VERIFY THAT THIS CONTRACTOR'S DOCUMENT

- HAS BEEN PRODUCED AND CHECKED IN ACCORDANCE WITH CONTRACTOR'S QUALITY ASSURANCE PLAN
- IS OF A STANDARD THAT WILL ENABLE THE EMPLOYER TO ACCEPT IT IN ACCORDANCE WITH THE CONTRACT
- COMPLIES WITH ALL REQUIREMENTS OF THE CONTRACT

FOLLOWING DEVIATIONS TO CONTRACT ARE REFERENCED FOR WHICH A DISPENSATION HAS BEEN ACCEPTED BY THE EMPLOYER:

OTHER RELATED LETTERS / RFI WHICH DOCUMENT CLARIFICATIONS ASSOCIATED WITH THIS DOCUMENT ARE LISTED BELOW:

CONTRACTOR'S PROJECT MANAGER:

F.SOLER — PRINT NAME | SIGNATURE | DATE: 18-04-2023

DOCUMENT STATUS STAMP

CODE 1	WORK MAY PROCEED
CODE 2	REVISE & RESUBMIT. WORK MAY PROCEED SUBJECT TO INCORPORATION OF COMMENTS INDICATED
CODE 3	REVISE & RESUBMIT. WORK MAY NOT PROCEED
CODE 4	REVIEW NOT REQUIRED. WORK MAY PROCEED

THE STATEMENT "WORK MAY PROCEED" APPLIES TO THE FOLLOWING WORK ACTIVITIES ASSOCIATED WITH THE MATTERS CONTAINED WITHIN THE CONTRACTOR'S DOCUMENT:
DESIGN / PROCUREMENT / CONSTRUCTION / ALL * ACTIVITIES

ANY REVIEW, COMMENT OR ACCEPTANCE BY EMPLOYER UNDER THIS CONTRACT WITH RESPECT TO ANY OF CONTRACTOR'S DOCUMENTS SHALL NOT IN ANY WAY BE, OR DEEMED TO BE, AN APPROVAL OF ANY WORKS OR AN ACCEPTANCE THAT THE CONTRACTOR'S DOCUMENTS MEET THE REQUIREMENTS OF THE CONTACT, AS CONTRACTOR HAS THE SOLE RESPONSIBILITY FOR PERFORMING THE WORKS IN ACCORDANCE WITH THE REQUIREMENTS OF THIS CONTRACT.

Aleksa Cavic	Code 1	11-05-2023
AD PORTS GROUP	APPROVAL CODE	DATE

Rev	Date	Description	Drawn	Chkd	Appr
C02	18-04-23	SD - Issued For Approval	MAK	F.B	F.S
C01	10-02-23	SD - Issued For Approval	MAK	F.B	F.S
C00	14-03-22	SD - Issued For Approval	MAK	F.B	F.S

Drawn by / Date	Checked by / Date	Approved by / Date
M.A.K 18-04-2023	E.S 18-04-2023	F.S 18-04-2023

Client: مجموعة موانئ أبوظبي AD PORTS GROUP

Contract No. & Project Title: MARINE WORKS FOR ABU DHABI MARITIME PROJECTS CONTRACT NO. 6200-203

Independent Checking Engineer — Signature

Contractor: rover UAE

Sub Contractor: AMF MARINE EQUIPMENT TRADING
FLOOR #17 I PRIME TOWER, AL ABRAJ STREET I BUSINESS BAY
P.O.Box 36010 Dubai, UAE T: +971 4 5598036 I F: +971 4 5579532
E: info@amf-marine.com I W: www.amf-marine.com

Drawing Title: AL ALYA FERRY TERMINAL FENDER AND FIXING DETAILS

Sheet	Scale	Paper Size
1 OF 1	AS SHOWN	A1

Drawing Status: SHOP DRAWING

Drawing No.	Revision
6200-203-VP-9100-01202	C02