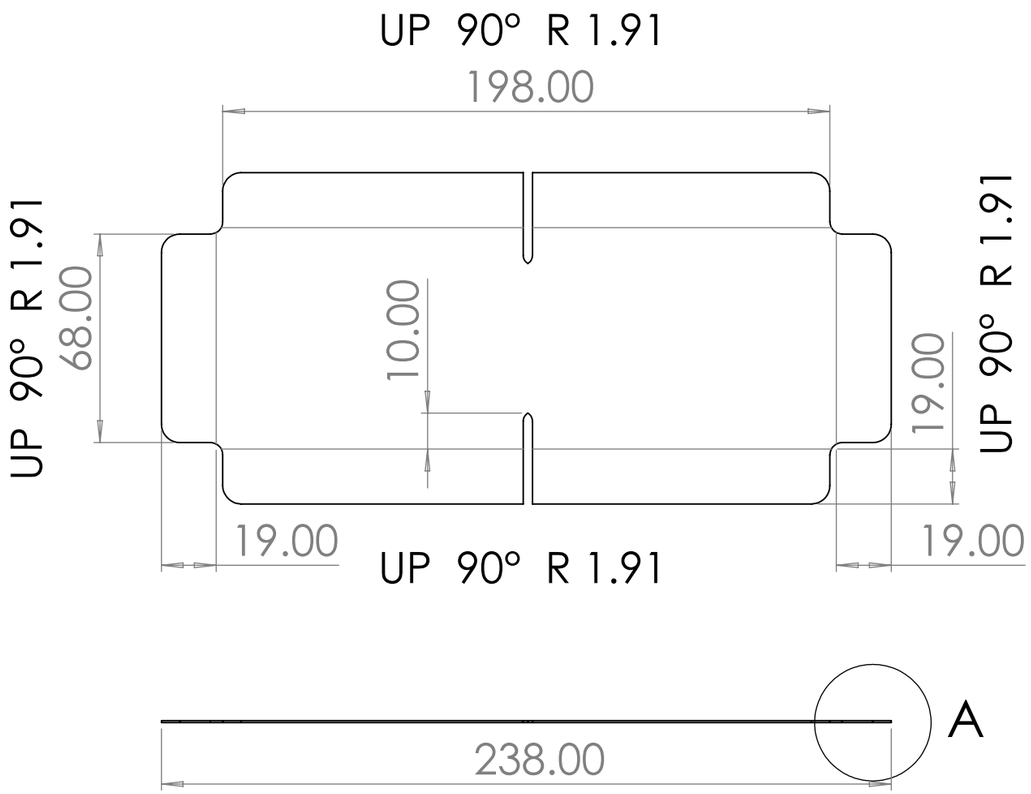

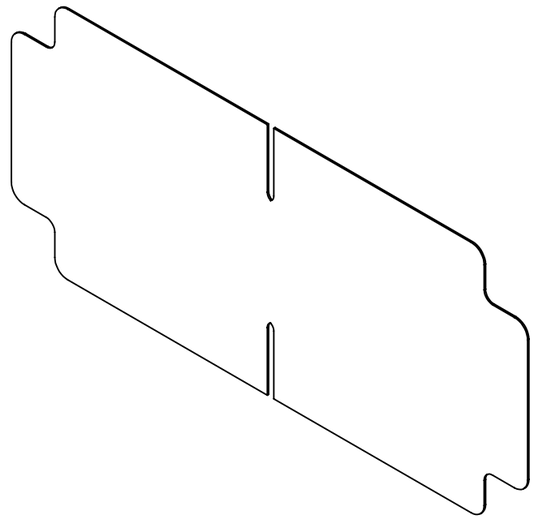

DETAIL A

SCALE 2 : 1

GROUP 7	AER03465 AEROSPACE TECHNOLOGY 2 TAILPLANE STRUCTURAL BOX
SCALE:1:2 DATE: 31/10/24	TITLE: RIB BL100, BL175, BL250 DWG NO. 61115 A3