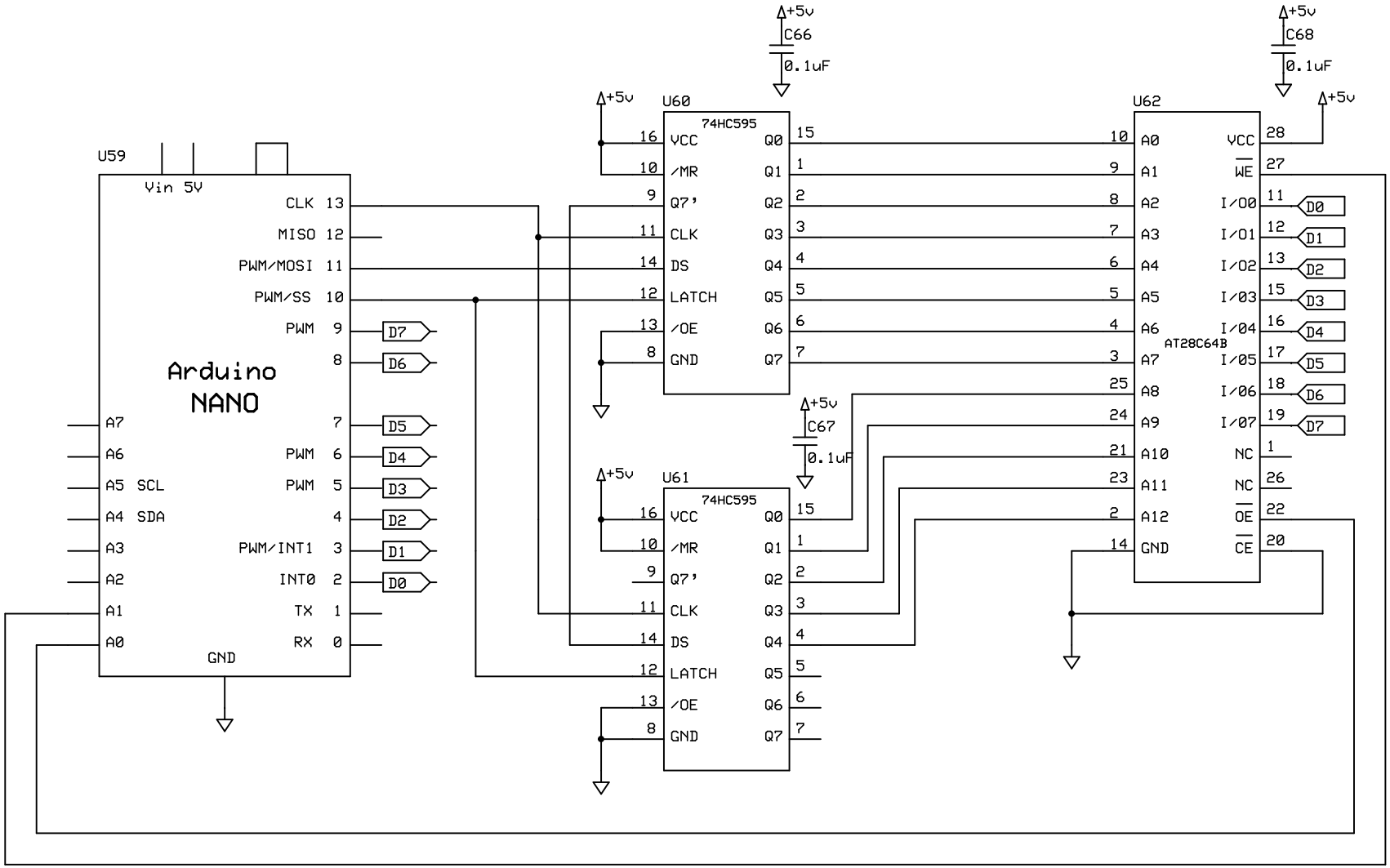


| 8-Bit Computer Interfaced With Arduino | | |
|---|---|---|
| EEPROM Programmer | | |
| Adam Antoshin | Rev 2.1<br>02/04/2020 | Page 1/1 |