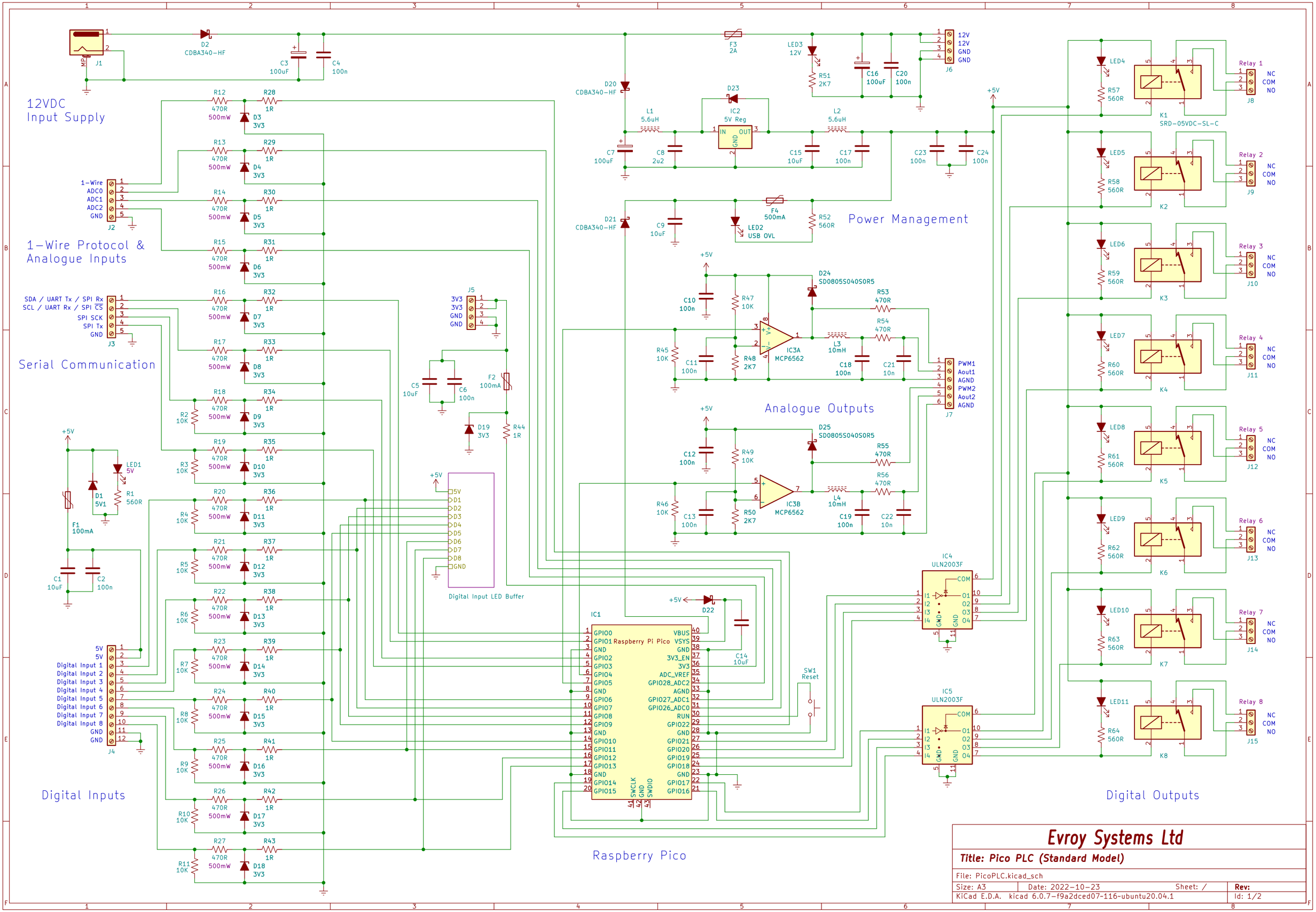
12VDC
Input Supply
1-Wire Protocol &
Analogue Inputs
Serial Communication
Digital Inputs
Digital Input LED Buffer
Raspberry Pico
Power Management
Analogue Outputs
Digital Outputs
Raspberry Pi Pico
IC1
IC2
5V Reg
IC3A
MCP6562
IC3B
MCP6562
IC4
ULN2003F
IC5
ULN2003F
K1
SRD-05VDC-SL-C
J1
J2
J3
J4
J5
J6
J7
J8
J9
J10
J11
J12
J13
J14
J15
SW1
Reset
Evroy Systems Ltd
Title: Pico PLC (Standard Model)
File: PicoPLC.kicad_sch
Size: A3
Date: 2022-10-23
Sheet: /
Rev:
KiCad E.D.A. kicad 6.0.7-f9a2dced07-116-ubuntu20.04.1
Id: 1/2

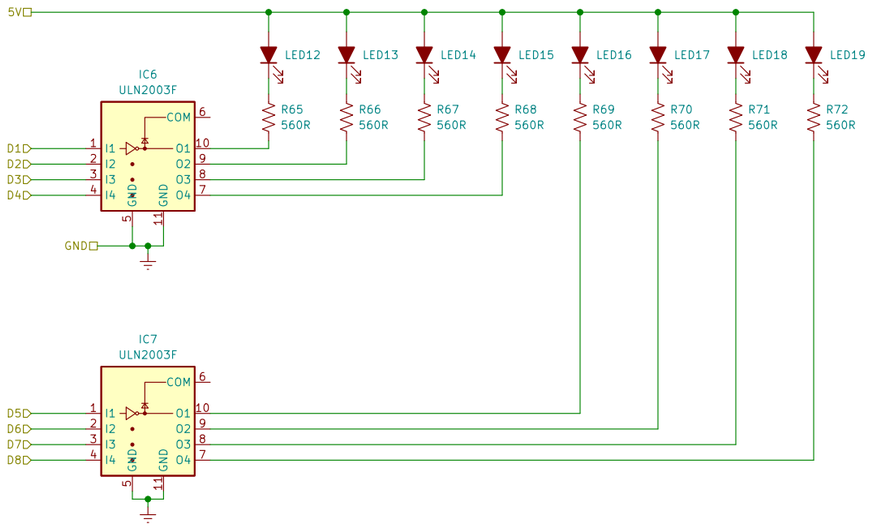

Evroy Systems Ltd

Title: PicoPLC – Digital Input LED (Buffer)

File: Input_LED_Buffer.kicad_sch		
Size: A3	Date: 2022-11-19	Sheet: /Digital Input LED Buffer/
KiCad E.D.A. kicad 6.0.7-f9a2dced07~116~ubuntu20.04.1		Rev: Id: 2/2