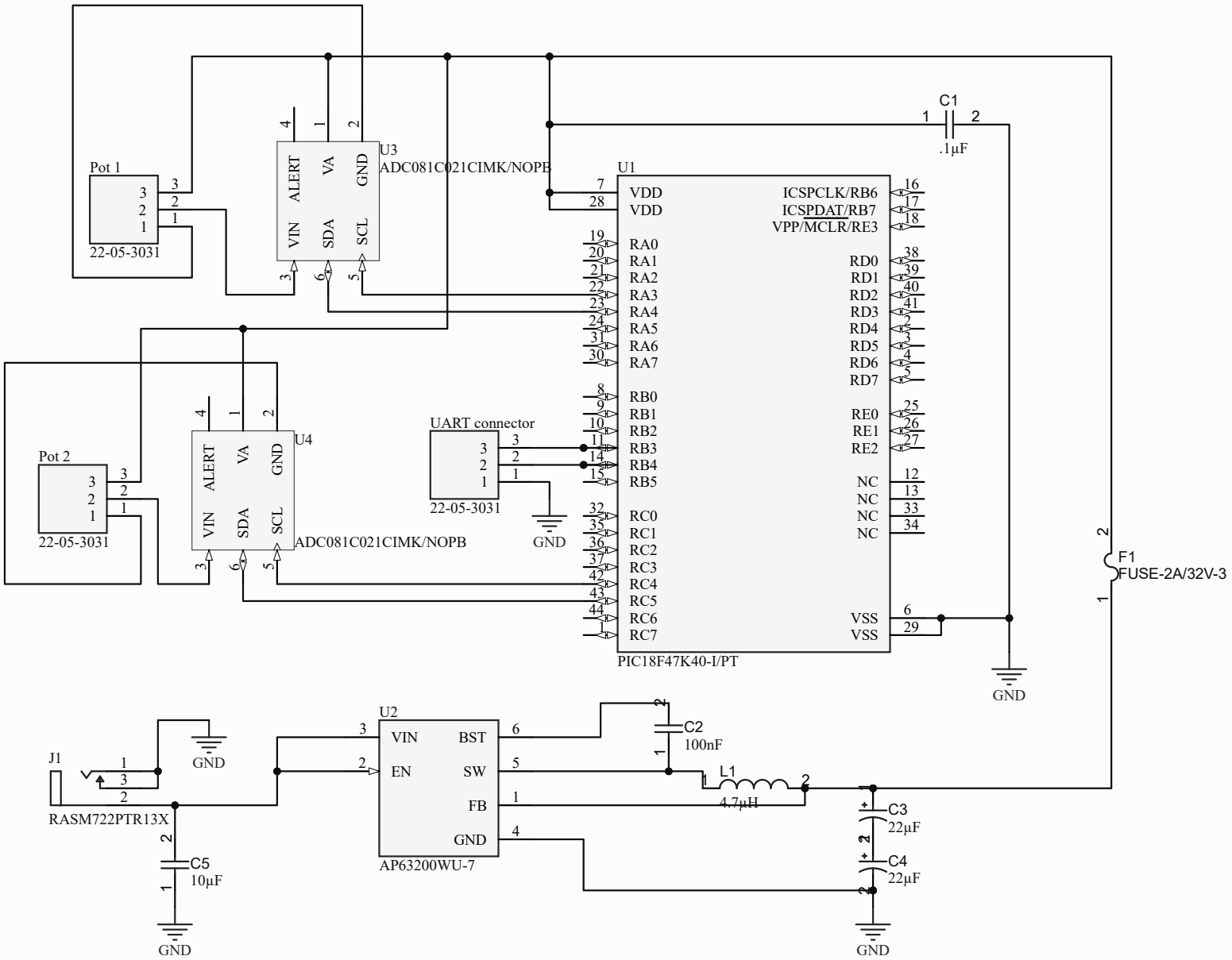

Title		
Size A	Number	Revision
Date: 2/28/2025		Sheet of
File: C:\Users\..\Human_interface.SchDoc		Drawn By: