CODEC driver

CODEC driver The CODEC driver registers a

struct snd_soc_component_driver . Before v4.17, it was

```
struct snd_soc_codec_driver
```

. Also registers a struct snd_soc_dai_driver

linux

```
int snd_soc_register_component(struct device *dev,
                 const struct snd_soc_component_driver *component_driver,
                 struct snd_soc_dai_driver *dai_drv, int num_dai); int
devm_snd_soc_register_component(struct device *dev,
                 const struct snd_soc_component_driver *component_driver,
                 struct snd_soc_dai_driver *dai_drv, int num_dai);
```

snd_soc_component_driver

```
struct snd_soc_component_driver {
        const char *name;

        /* Default control and setup, added after probe() is run */
        const struct snd_kcontrol_new *controls;
        unsigned int num_controls;
        const struct snd_soc_dapm_widget *dapm_widgets;
        unsigned int num_dapm_widgets;
        const struct snd_soc_dapm_route *dapm_routes;
        unsigned int num_dapm_routes;

        int (*probe)(struct snd_soc_component *component);
        void (*remove)(struct snd_soc_component *component);
        int (*suspend)(struct snd_soc_component *component);
        int (*resume)(struct snd_soc_component *component);
```

snd_soc_component_driver

```
[...]
```

snd_soc_component_driver

- struct snd_kcontrol_new *controls is an array of controls (volume, mixing, muxing, switches) available on the CODEC.
- struct snd_soc_dapm_widget *dapm_widgets is an array of power management controls so ASoC can power down the routes that are not currently used.
- struct snd_soc_dapm_route *dapm_routes is an array describing those routes.

snd_soc_component_driver

linux

```
        /* component wide operations */
        int (*set_sysclk)(struct snd_soc_component *component,
                          int clk_id, int source, unsigned int freq, int
dir);
        int (*set_pll)(struct snd_soc_component *component, int pll_id,
                       int source, unsigned int freq_in, unsigned int
freq_out);
        [...]
        int (*hw_params)(struct snd_soc_component *component,
                         struct snd_pcm_substream *substream,
                         struct snd_pcm_hw_params *params);
        [...]
}
```

snd_soc_component_driver

- `set_sysclk` allows setting the input clock of the component.
- `set_pll` allows setting the PLLs, this is mostly useful when the component is the clock producer.
- `hw_params` is a callback called on PCM stream setup. When called, all the parameters of the stream are known so it is possible to configure the component to handle the stream correctly.
- Those are mostly not used, the DAI specific callbacks are used instead.

snd_soc_dai_driver

```
/*
 * Digital Audio Interface Driver.
 *
 * Describes the Digital Audio Interface in terms of its ALSA, DAI and AC97
 * operations and capabilities. Codec and platform drivers will register
this
 * structure for every DAI they have.
 *
 * This structure covers the clocking, formating and ALSA operations for
each
 * interface.
 */
struct snd_soc_dai_driver {
        /* DAI description */
        const char *name;
```

snd_soc_dai_driver

```
        [...]

        /* ops */
        const struct snd_soc_dai_ops *ops;
        const struct snd_soc_cdai_ops *cops;

        /* DAI capabilities */
        struct snd_soc_pcm_stream capture;
        struct snd_soc_pcm_stream playback;
        [...]
};
```

snd_soc_pcm_stream

linux

```
/* SoC PCM stream information */
struct snd_soc_pcm_stream {
        const char *stream_name;
        u64 formats;                    /* SNDRV_PCM_FMTBIT_* */
        unsigned int rates;             /* SNDRV_PCM_RATE_* */
        unsigned int rate_min;          /* min rate */
        unsigned int rate_max;          /* max rate */
        unsigned int channels_min;      /* min channels */
        unsigned int channels_max;      /* max channels */
        unsigned int sig_bits;          /* number of bits of content */
};
```

PCM5102

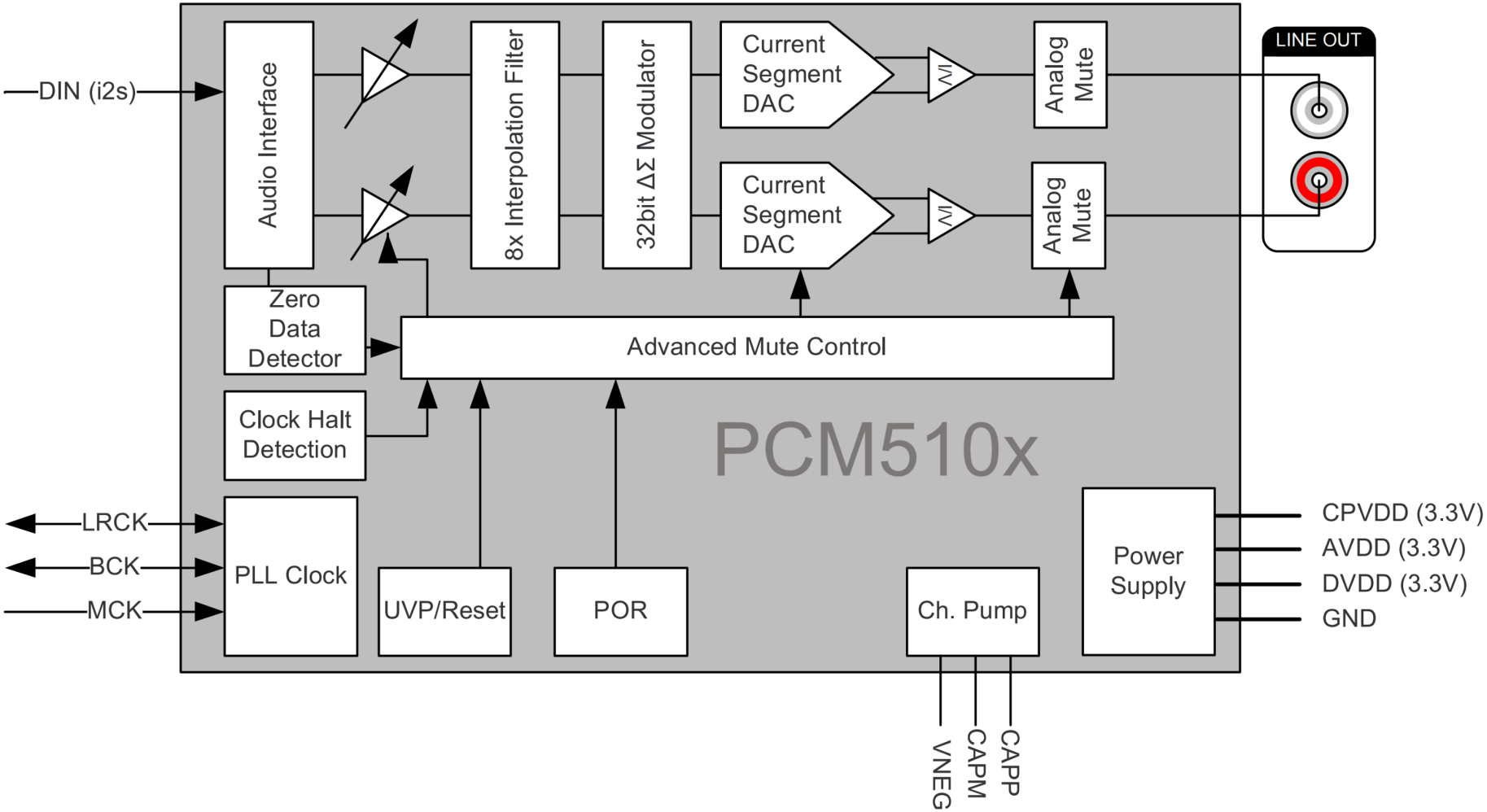
DIN (i2s)
Audio Interface
8x Interpolation Filter
32bit ΔΣ Modulator
Current Segment DAC
Current Segment DAC
I/V
I/V
Analog Mute
Analog Mute
LINE OUT
Zero Data Detector
Advanced Mute Control
Clock Halt Detection
PCM510x
LRCK
BCK
MCK
PLL Clock
UVP/Reset
POR
Ch. Pump
Power Supply
CPVDD (3.3V)
AVDD (3.3V)
DVDD (3.3V)
GND
VNEG
CAPM
CAPP

pcm5102a.c

```
static struct snd_soc_dai_driver pcm5102a_dai = {
        .name = "pcm5102a-hifi",
        .playback = {
                .channels_min = 2,
                .channels_max = 2,
                .rates = SNDRV_PCM_RATE_8000_384000,
                .formats = SNDRV_PCM_FMTBIT_S16_LE |
                           SNDRV_PCM_FMTBIT_S24_LE |
                           SNDRV_PCM_FMTBIT_S32_LE
        },
};

static struct snd_soc_component_driver soc_component_dev_pcm5102a = {
        .idle_bias_on                   = 1,
        .use_pmdown_time                = 1,
```

pcm5102a.c

```
        .endianness                     = 1,
};

static int pcm5102a_probe(struct platform_device *pdev)
{
        return devm_snd_soc_register_component(&pdev->dev,
&soc_component_dev_pcm5102a,
                        &pcm5102a_dai, 1);
}
```

PCM3008

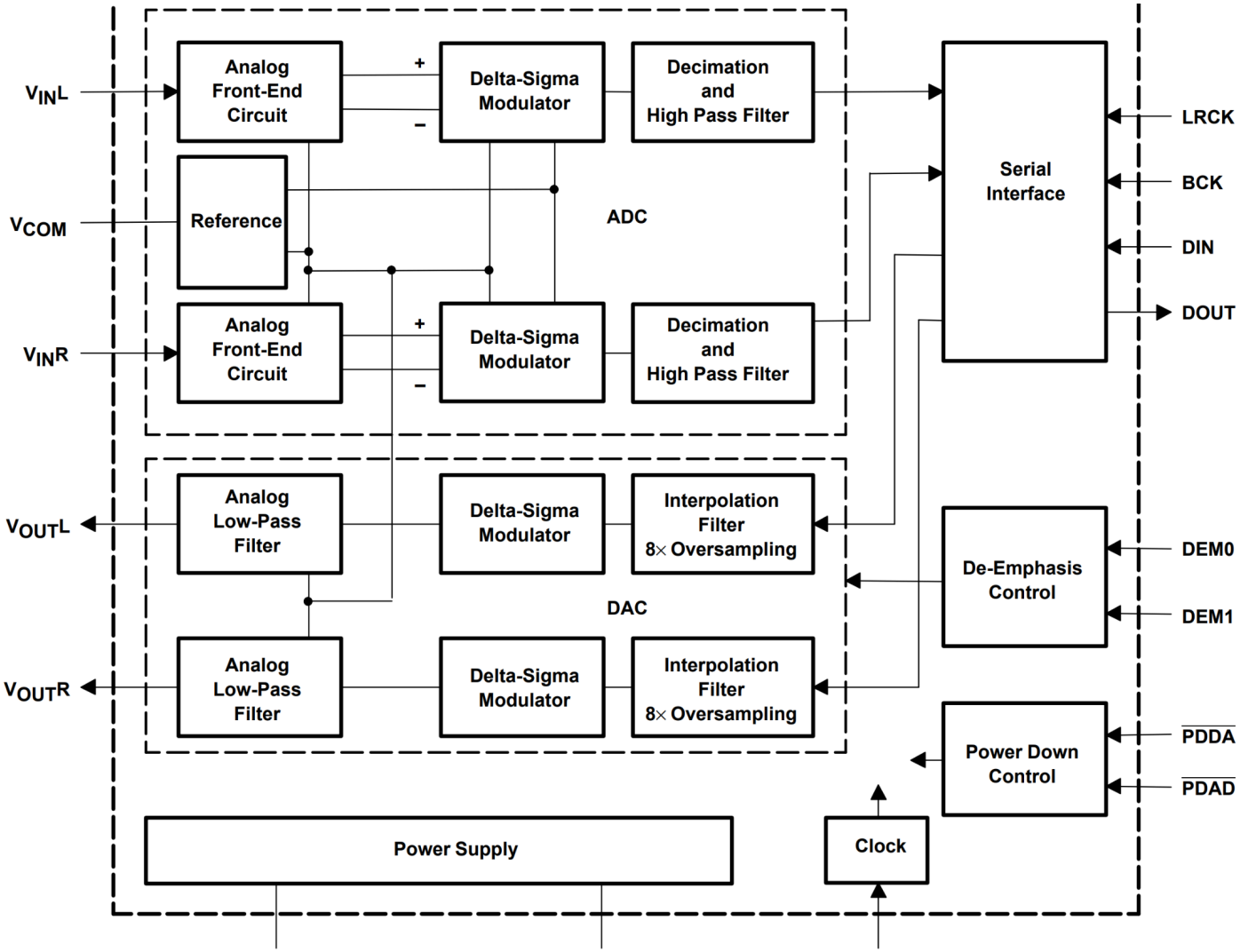
VINL
VCOM
VINR
VOUTL
VOUTR
Analog Front-End Circuit
Reference
Analog Front-End Circuit
+
–
+
–
Delta-Sigma Modulator
Delta-Sigma Modulator
Decimation and High Pass Filter
Decimation and High Pass Filter
ADC
Analog Low-Pass Filter
Analog Low-Pass Filter
Delta-Sigma Modulator
Delta-Sigma Modulator
Interpolation Filter 8× Oversampling
Interpolation Filter 8× Oversampling
DAC
Serial Interface
De-Emphasis Control
Power Down Control
Clock
Power Supply
LRCK
BCK
DIN
DOUT
DEM0
DEM1
PDDA
PDAD

pcm3008.c

```
#define PCM3008_RATES (SNDRV_PCM_RATE_32000 | SNDRV_PCM_RATE_44100
|
                       SNDRV_PCM_RATE_48000)

static struct snd_soc_dai_driver pcm3008_dai = {
        .name = "pcm3008-hifi",
        .playback = {
                .stream_name = "PCM3008 Playback",
                .channels_min = 1,
                .channels_max = 2,
                .rates = PCM3008_RATES,
                .formats = SNDRV_PCM_FMTBIT_S16_LE,
        },
        .capture = {
                .stream_name = "PCM3008 Capture",
```

pcm3008.c

```
                .channels_min = 1,
                .channels_max = 2,
                .rates = PCM3008_RATES,
                .formats = SNDRV_PCM_FMTBIT_S16_LE,
        },
};
```

pcm3008.c

```
static const struct snd_soc_component_driver soc_component_dev_pcm3008 = {
        .dapm_widgets           = pcm3008_dapm_widgets,
        .num_dapm_widgets       = ARRAY_SIZE(pcm3008_dapm_widgets),
        .dapm_routes            = pcm3008_dapm_routes,
        .num_dapm_routes        = ARRAY_SIZE(pcm3008_dapm_routes),
        .idle_bias_on           = 1,
        .use_pmdown_time        = 1,
        .endianness             = 1,
};

static int pcm3008_codec_probe(struct platform_device *pdev)
{
        [...]

        return devm_snd_soc_register_component(&pdev->dev,
```

pcm3008.c

```
                                &soc_component_dev_pcm3008, &pcm3008_dai, 1);
}
```

pcm3008.c

```
static const struct snd_soc_dapm_widget pcm3008_dapm_widgets[] = {
SND_SOC_DAPM_INPUT("VINL"), SND_SOC_DAPM_INPUT("VINR"),

SND_SOC_DAPM_DAC_E("DAC", NULL, SND_SOC_NOPM, 0, 0, pcm3008_dac_ev,
                   SND_SOC_DAPM_PRE_PMU | SND_SOC_DAPM_POST_PMD),
SND_SOC_DAPM_ADC_E("ADC", NULL, SND_SOC_NOPM, 0, 0, pcm3008_adc_ev,
                   SND_SOC_DAPM_PRE_PMU | SND_SOC_DAPM_POST_PMD),

SND_SOC_DAPM_OUTPUT("VOUTL"), SND_SOC_DAPM_OUTPUT("VOUTR"),
};

static const struct snd_soc_dapm_route pcm3008_dapm_routes[] = {
        { "PCM3008 Capture", NULL, "ADC" },
        { "ADC", NULL, "VINL" },
        { "ADC", NULL, "VINR" },
```

pcm3008.c

```
        { "DAC", NULL, "PCM3008 Playback" },
        { "VOUTL", NULL, "DAC" },
        { "VOUTR", NULL, "DAC" },
};
```