Embedded audio Hardware

Anatomy

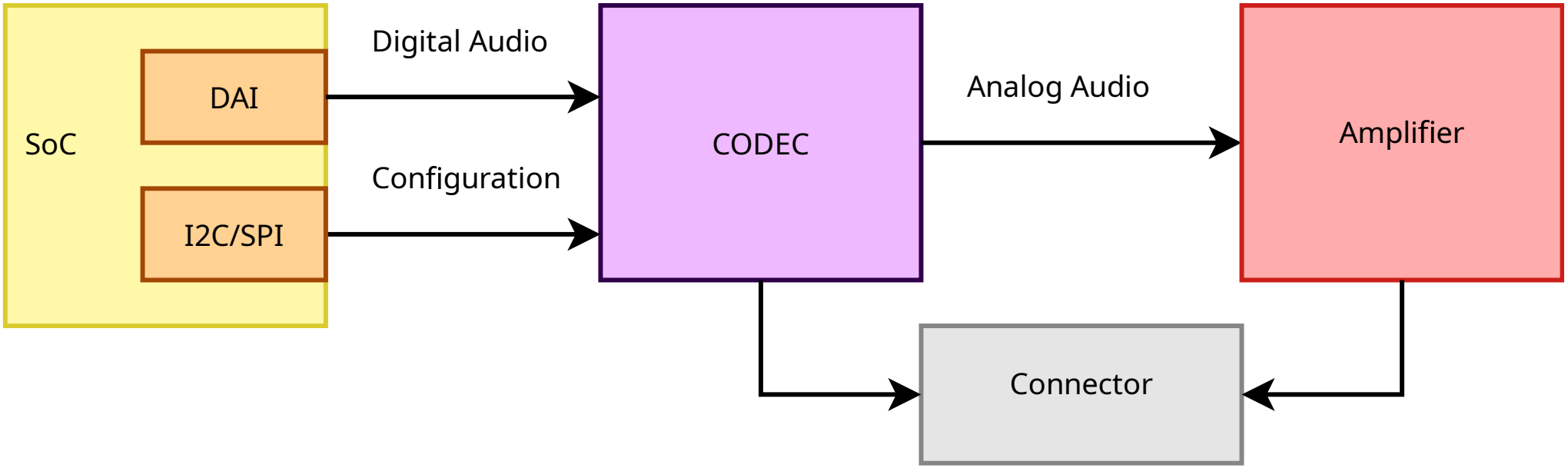

Example of an embedded system sound card

CODECs

CODECs

- A CODEC is a device that COdes and DECodes audio samples.
- It integrates an analog-to-digital converter (ADC) and a digital-to-analog converter (DAC) into a single chip.
- It converts a voltage signal from an analog input (e.g. microphone) to a sequence of samples or converts a stream of samples to a voltage for an analog output (e.g. speaker driver).
- It also has one or multiple digital audio interfaces (DAI) to transfer samples to or from a microcontroller or microprocessor.
- Usually an extra digital bus is used for configuration

Digital audio interface - signals The CODEC DAI is a

synchronous serial bus. A common PCM interface is represented here:

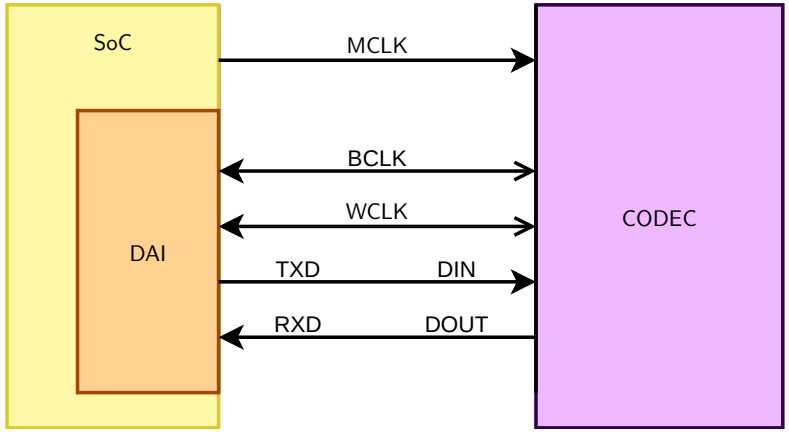

Digital audio interface - signals

- The PCM DAI uses two clocks: the bit clock and the frame clock.
  - The bit clock is usually referred to as BCK or BCLK
  - The frame clock is often called FCLK/FSCK/FSCLK, LRCK/LRCLK (Left Right clock) or WCLK (word clock). Its rate is the sample rate also called Fs.
  - The relationship between BCK and FSCK is: $bck = fsck * Nchannels * BitDepth$
- It also has one or multiple data lines.

Digital audio interface - Data

- Codecs may have multiple data in or data out lines, one line per channel pair.
- Codecs may also have multiple DAI, one full interface for data in and one for data out.

e.g. AD1937 has:

- 8 DACs in 4 pairs, 4 ADCs in 2 pairs
- clocks for data-in: DBCLK, DLRCLK
- 4 data-in lines (DSDATA[1-4])
- clocks for data-out: ABCLK, ALRCLK
- 2 data-out lines (ASDATA[1-2])

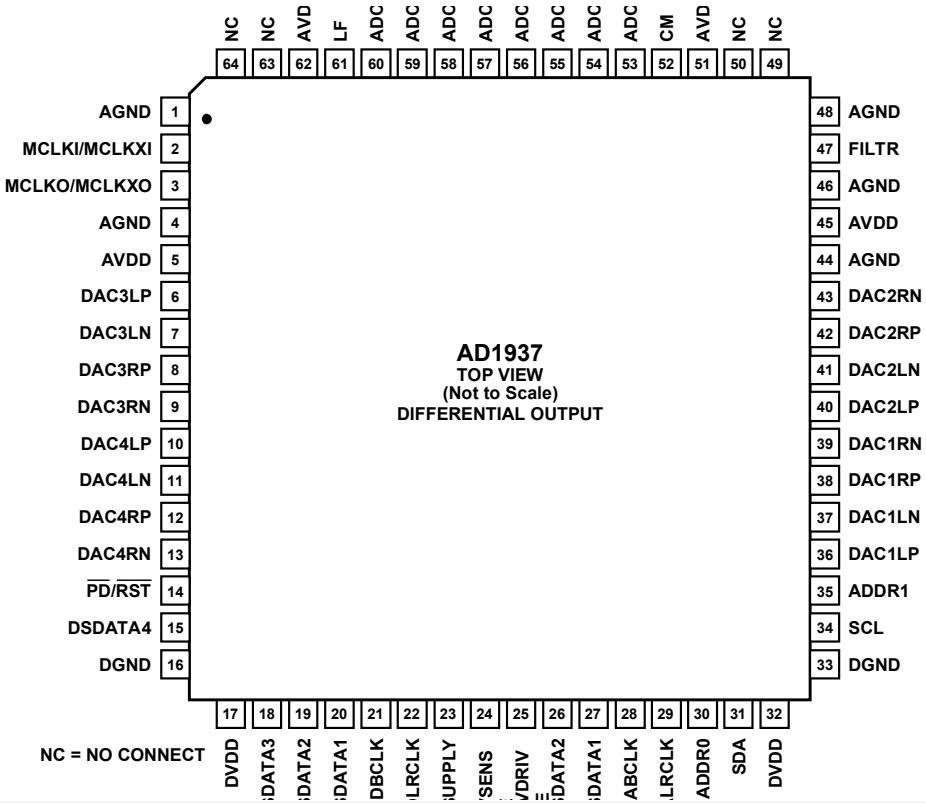

MCLK

- MCLK is the codec clock. It is sometimes referred as the system clock. The IC needs it to be working.
- Some codecs will also require it to be able to use the control interface.
- Can be provided by the SoC when it has suitable clocks or a crystal.
- Some codecs are able to use BCLK or LRCLK as their clock, making MCLK optional.
- Usually the codecs will expect MCLK to be a multiple of BCLK. Usually specified as a multiple of Fs.

SoC Digital Audio Interface

SoC

- The SoC also has a dedicated synchronous serial interface.
- Some are generic serial interfaces others are dedicated to audio formats.
- It has a DMA controller or a peripheral DMA controller (PDC) able to copy samples from memory to the serial interface registers or FIFO.
- It quite often also has dedicated multimedia (audio/video) clocks.
- Examples: Atmel SSC, NXP SSI, NXP SAI, TI McASP
- Some SoCs have a separate SPDIF controller
- Some SoCs (Allwinner A33, Atmel SAMA5D2) have the codec and the amplifier on the SoC itself so the sound card is completely on the SoC.

Digital formats

Digital formats - Left Justified

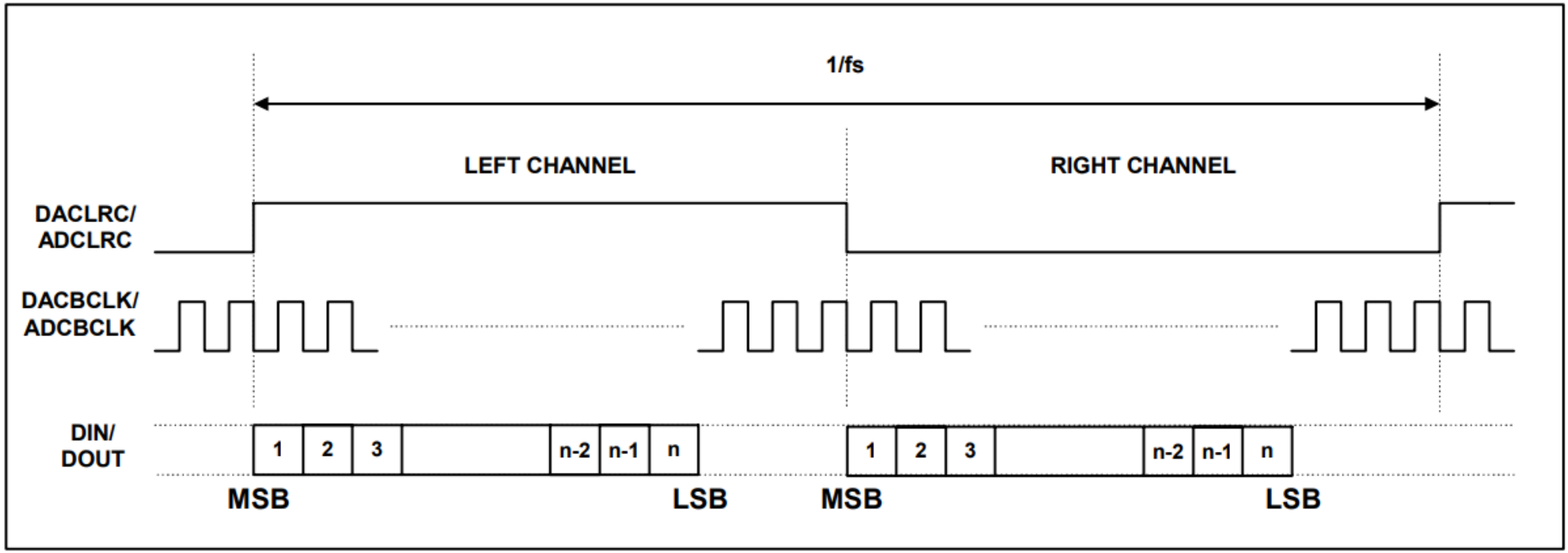

Digital formats - Right Justified

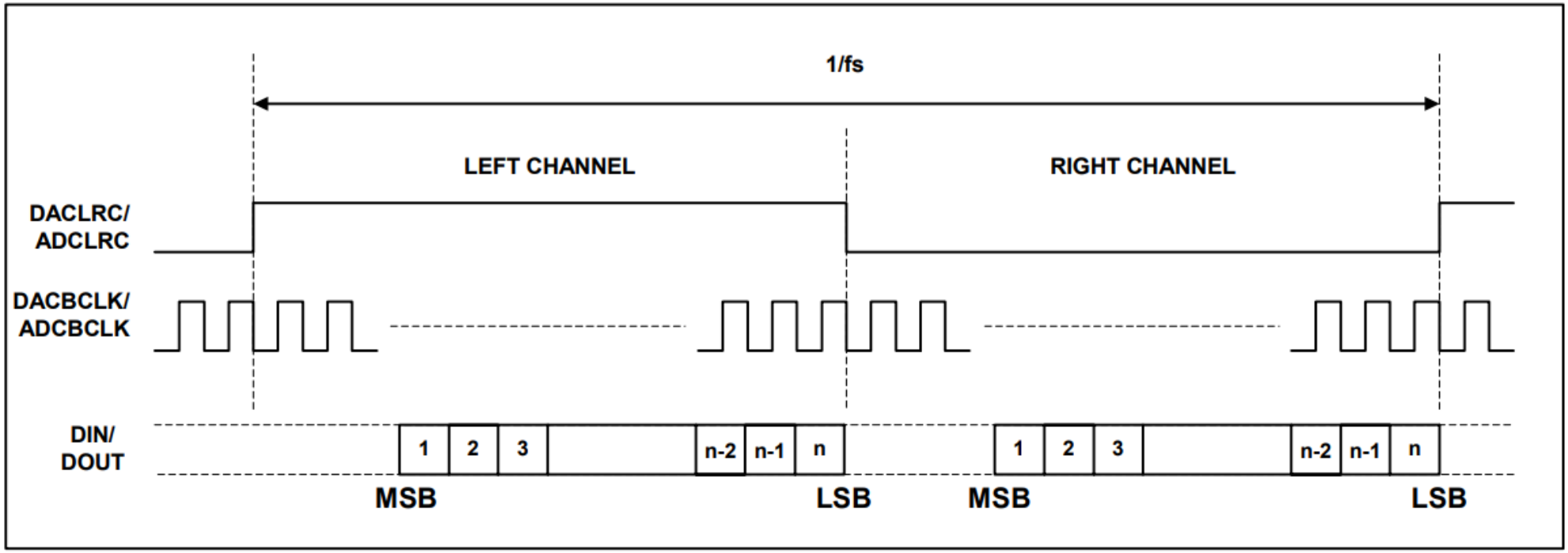

Digital formats - I2S

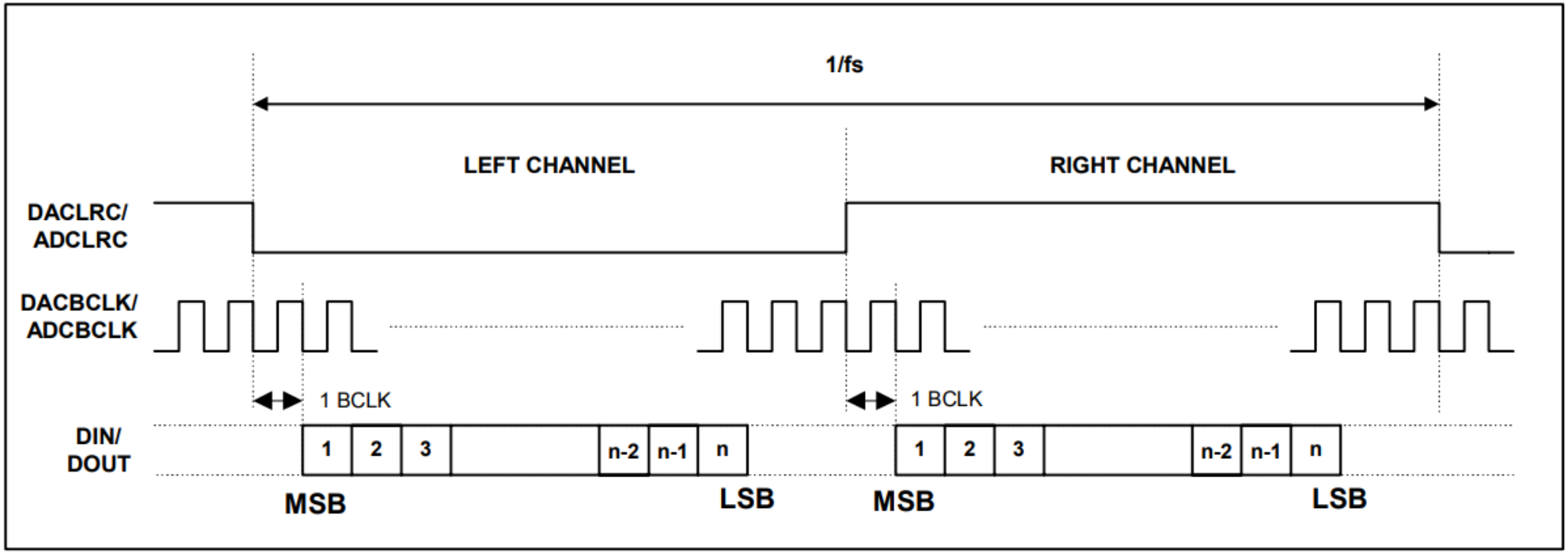

Digital formats - DSP A

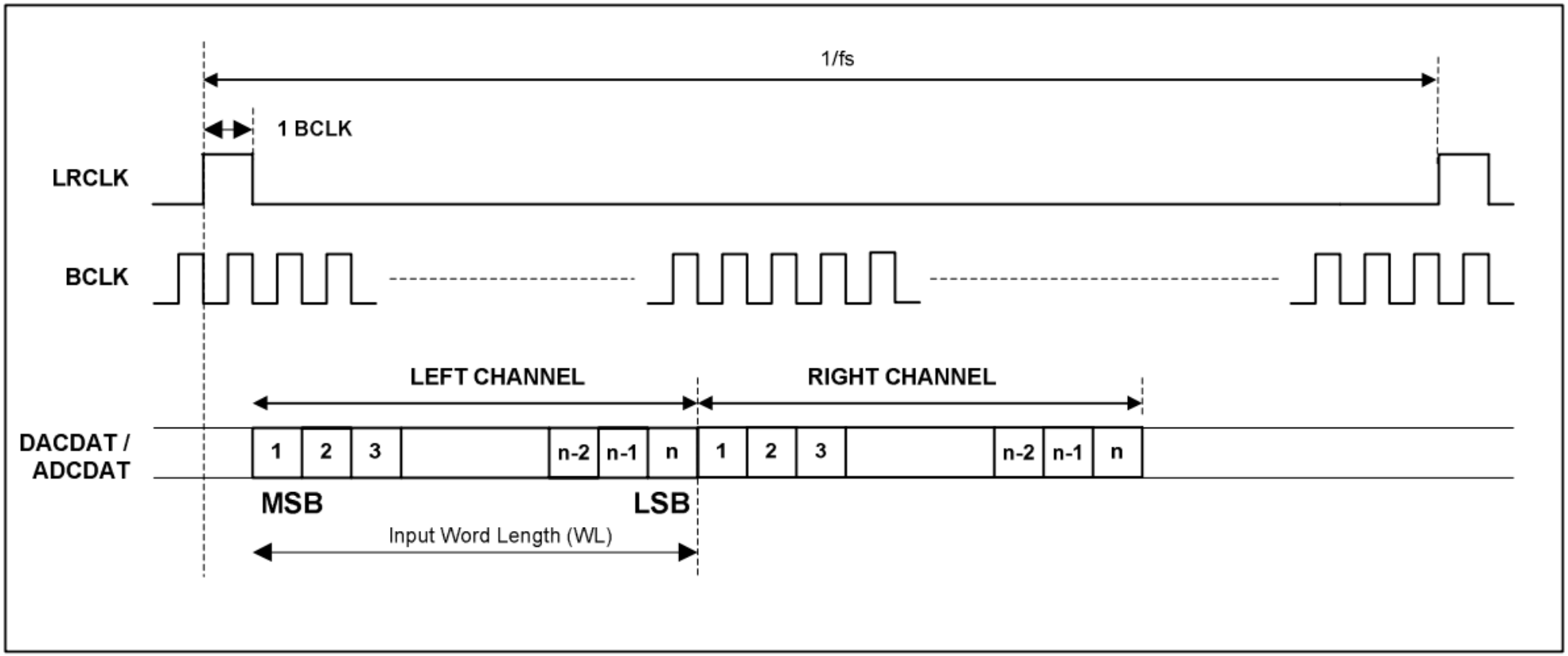

Digital formats - DSP B

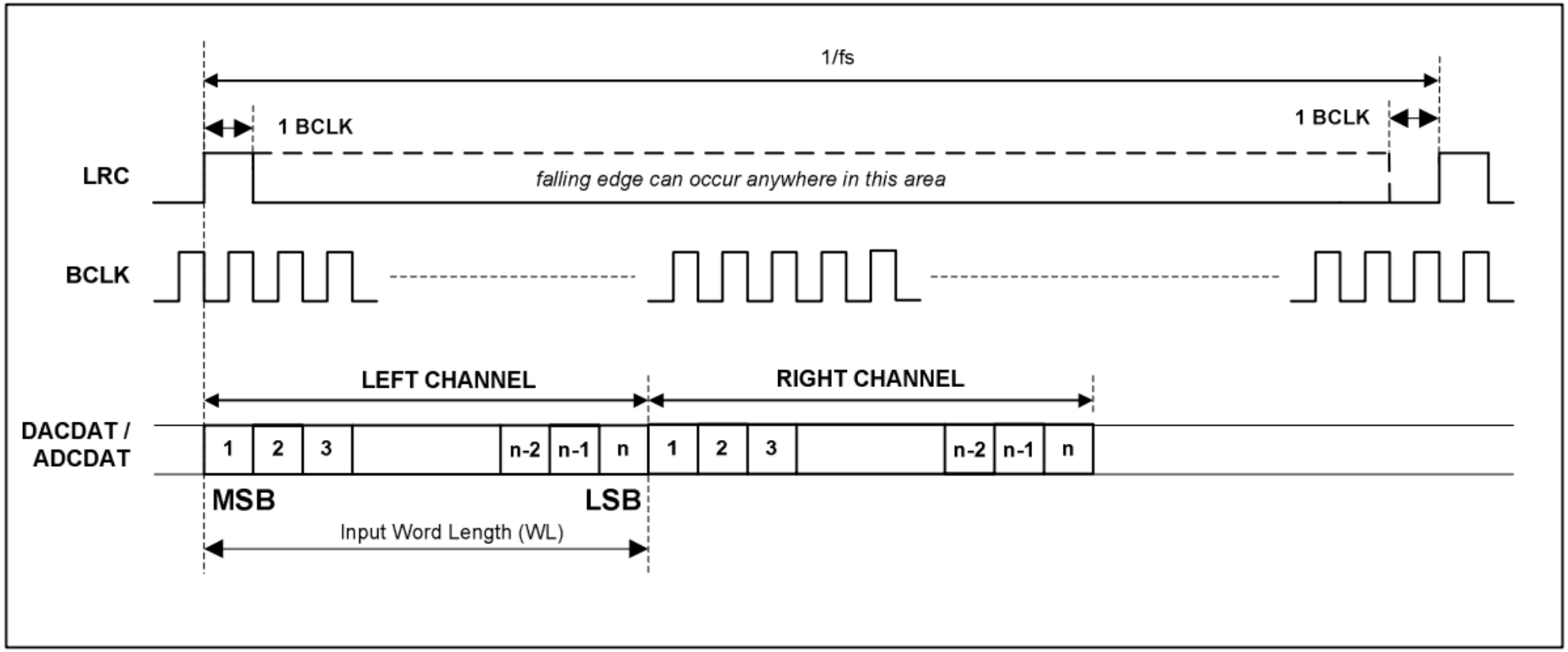

Digital formats - TDM

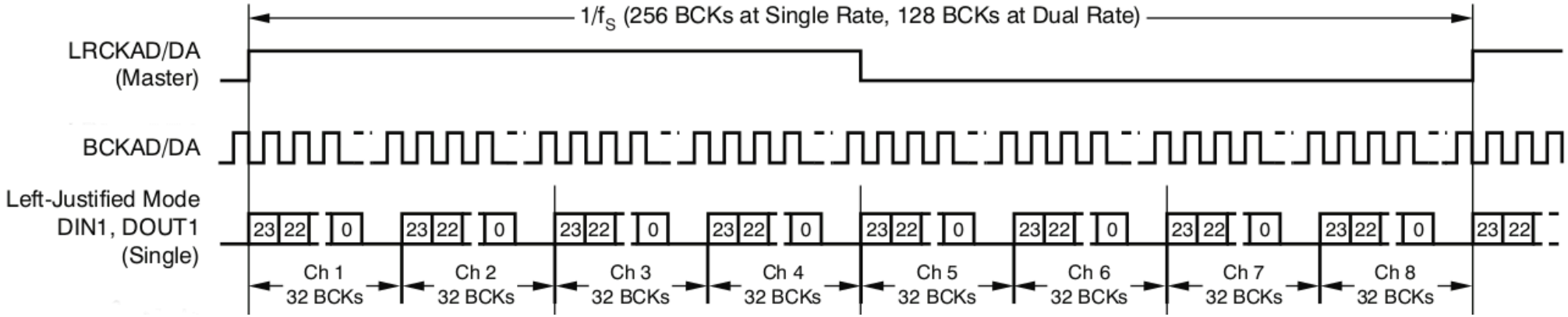

Digital formats - AC-link AC97 uses TDM slots. Slot 0 is 16bit

wide and is the tag. Then twelve 20bit wide slots are used to transmit data.

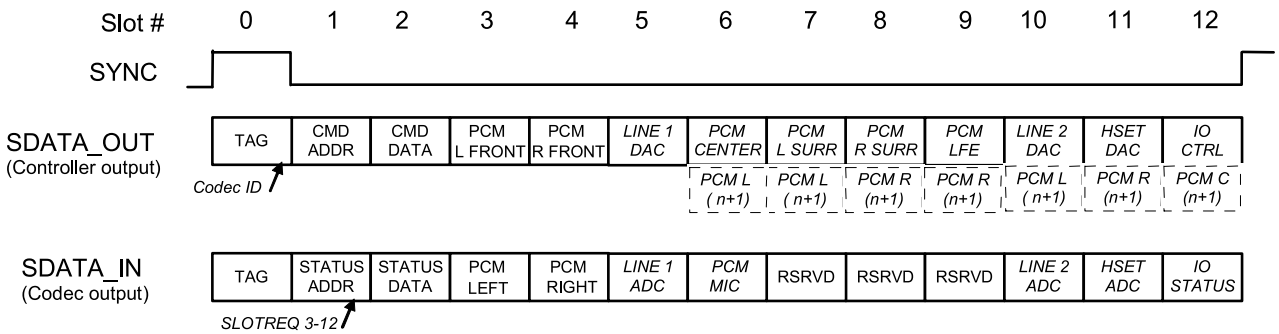

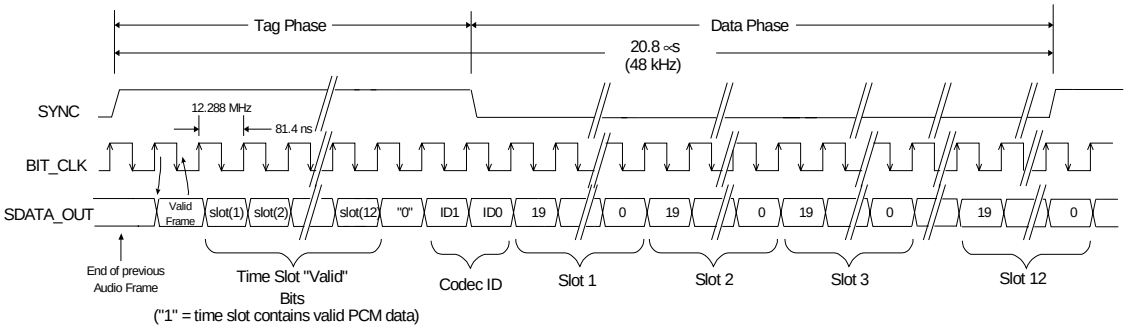

Digital formats - PDM There is another, less common interface,

using Pulse Density Modulation. It has two signals per channels, clock and data. Data has only one bit.

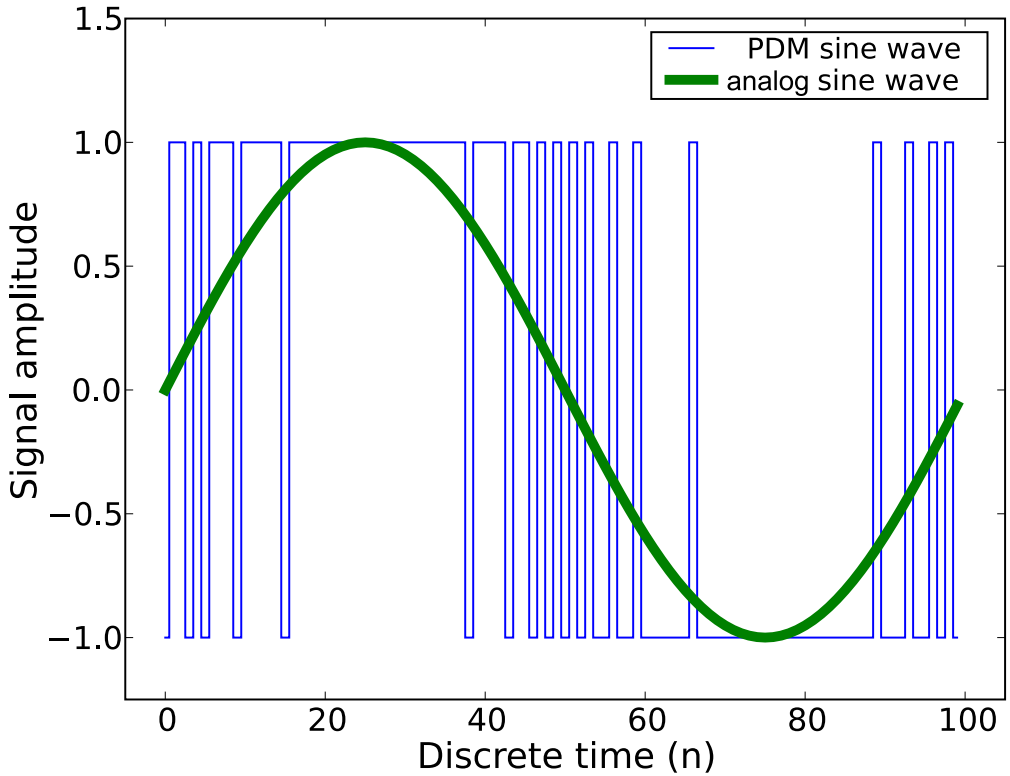

Digital formats - S/PDIF or IEC 60958 S/PDIF uses only one wire.

Data is encoded using BMC (Biphase Mark Code), also known as differential Manchester encoding. Its clock is then twice the bitrate.

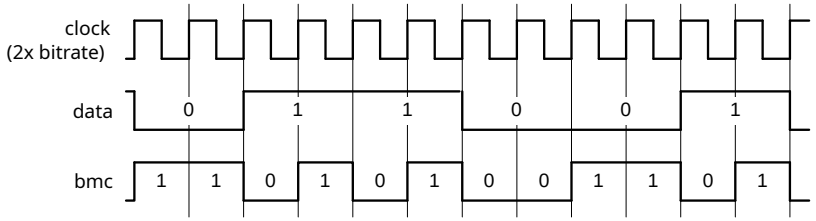

Blocks of 192 frames are transmitted, each frame consisting of two subframes (32bit words). There are three different preambles, one for start of block and channel 0, one for channel 0 and one for channel 1.

Digital formats - S/PDIF or IEC 60958 S/PDIF uses only one wire.

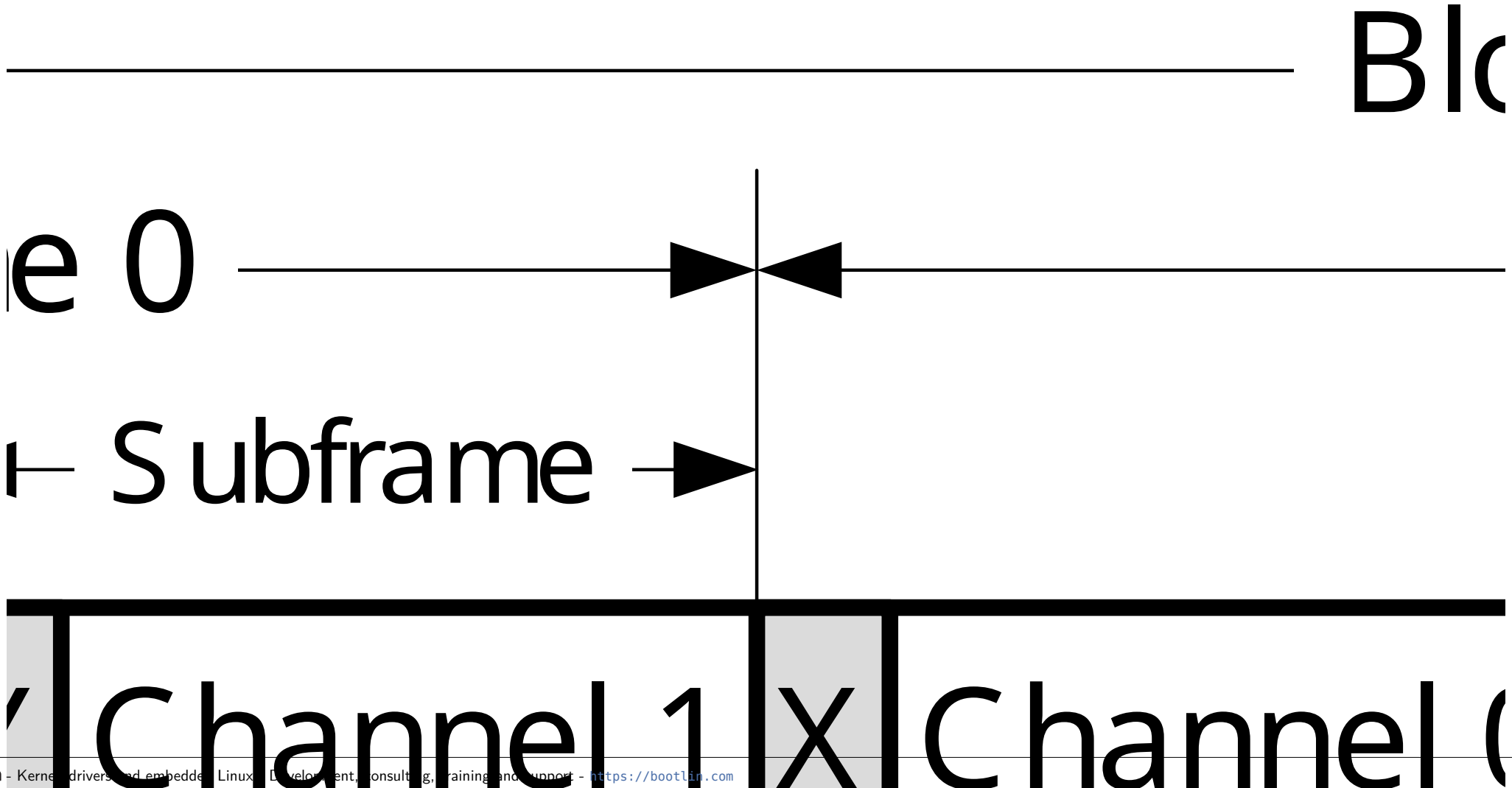

Auxiliary devices

Auxiliary devices

- Some devices may be on the analog path of the audio signal.
- They can be amplifiers, potentiometers or multiplexers.
- Some can be controlled and should be exposed as controls of the sound card.

Clocks

Clocks: producer/consumer

- One of the DAI is responsible to generate the bit clock, it is the bit clock producer (previously: master).
- One of the DAI is responsible to generate the frame clock, it is the frame producer.
- Some CODECs have a great set of PLLs and dividers, allowing to get a precise BCLK from many different MCLK rates.
- Quite often, it is better to use the CODEC as producer. However, some SoCs have specialized audio PLLs.