Adam Turaj

Mechatronics Engineering Student
at the University of Waterloo

aturaj@uwaterloo.ca
adamturaj.com
linkedin.com/in/adam-turaj

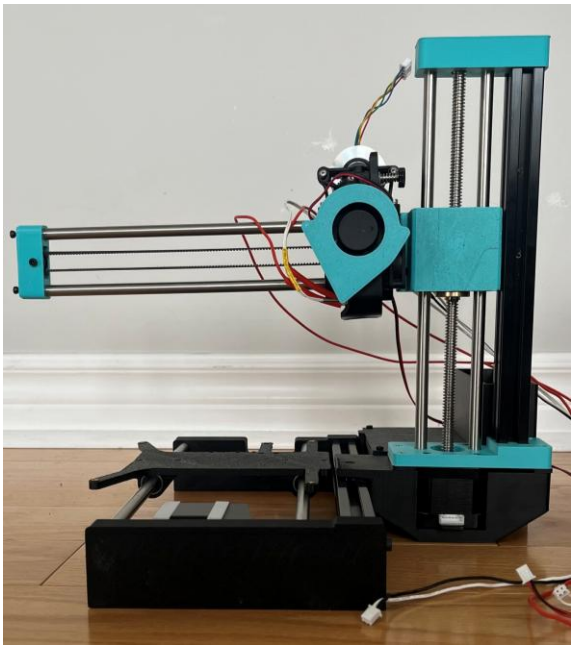

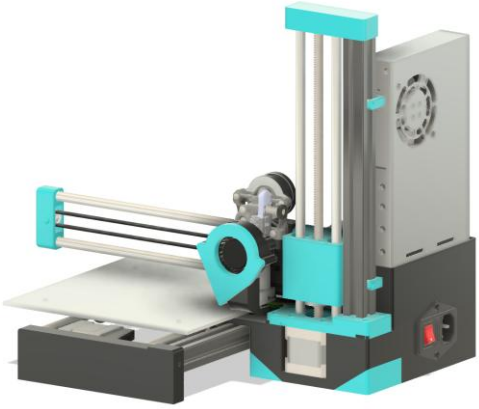

Cantilever 3D Printer↗

February 2025 – August 2025

Task

- Design and build a reliable cantilever-style 3D printer with a 180x180x180mm build volume.
- Prioritize DFMA and a total cost less than $300 USD.
- Incorporate eddy-based bed probing and design the system to support future input shaping.

Process

- Designed printer architecture using Fusion360.
- Created precise linear actuation systems using linear rods, belts, and leadscrews.
- Packaged toolhead with part-cooling fan and direct drive extruder, allowing for reliable and high-quality prints.

Result

- Successfully printed a Benchy with comparable quality to off-the-shelf printers in 1 hour and 13 minutes.
- Achieved an easy assembly experience with proper tool clearance.
- Started building a V2 redesign, which showed promising improvements, but left it unfinished after university started.

Adam Turaj

Mechatronics Engineering Student
at the University of Waterloo

aturaj@uwaterloo.ca
adamturaj.com
linkedin.com/in/adam-turaj

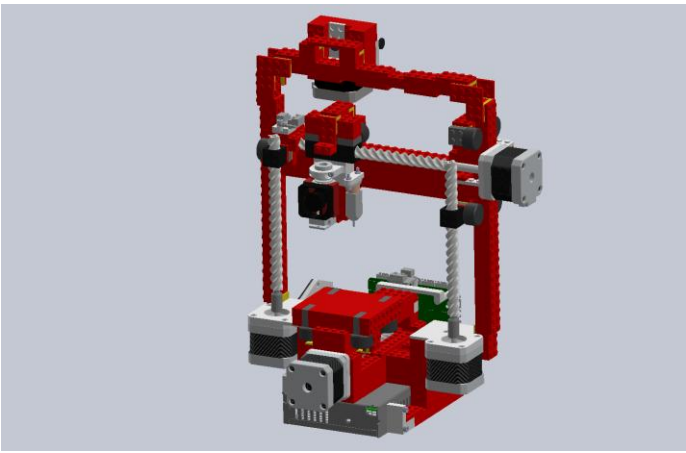

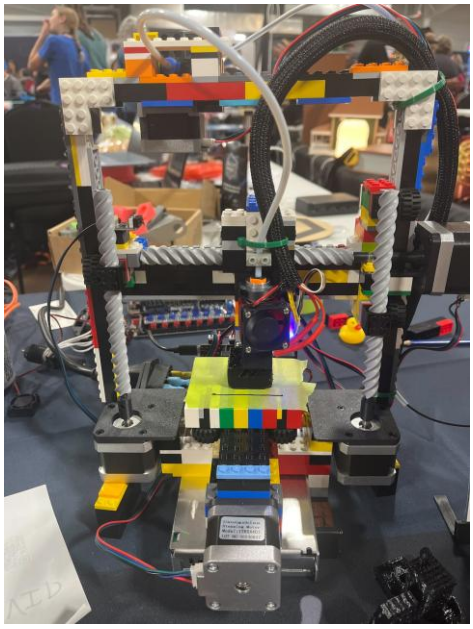

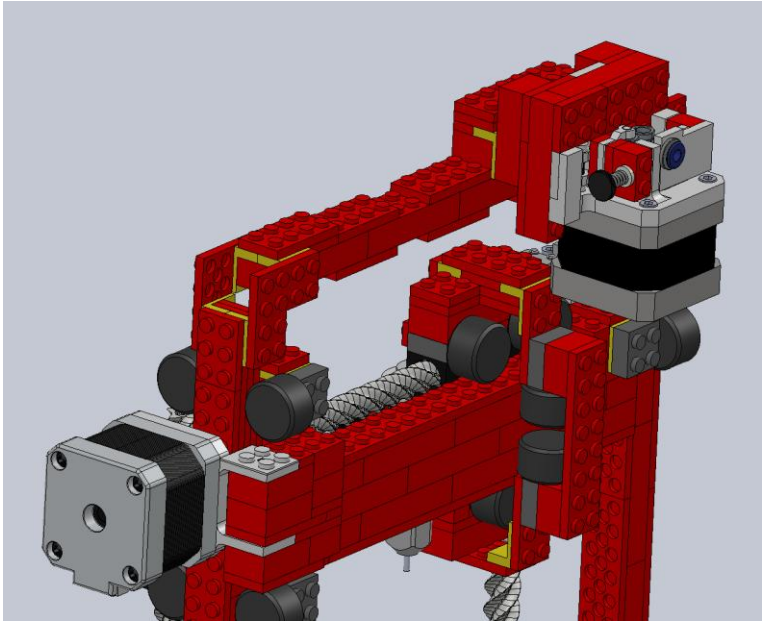

LEGO 3D Printer↗

February 2026 – April 2026

Task

- Design a functional 3D printer built primarily from classic LEGO bricks, capable of printing a full-sized Benchy boat.
- Create a printer that is both mechanically sound and visually appealing.

Process

- Modeled the full mechanical system in SolidWorks.
- Used a Bowden-style extrusion system to reduce moving mass, making reliable printing more feasible.
- Designed custom 3D-printed mounts for the steppers and electronics.

Result

- Successfully printed a full sized Benchy boat on the first attempt.
- Quality exceeded expectations with defects mainly caused by insufficient part cooling and slight Z-axis instability.
- Optimized design to use 92% LEGO by part count.

Adam Turaj

Mechatronics Engineering Student
at the University of Waterloo

aturaj@uwaterloo.ca
adamturaj.com
linkedin.com/in/adam-turaj

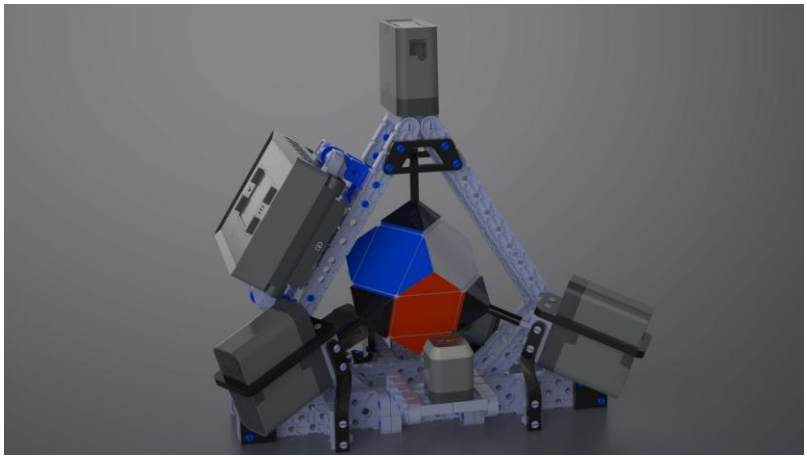

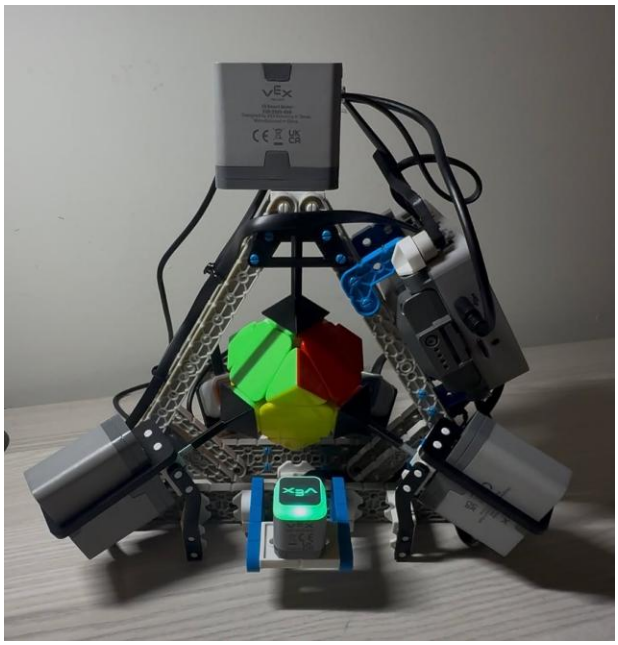

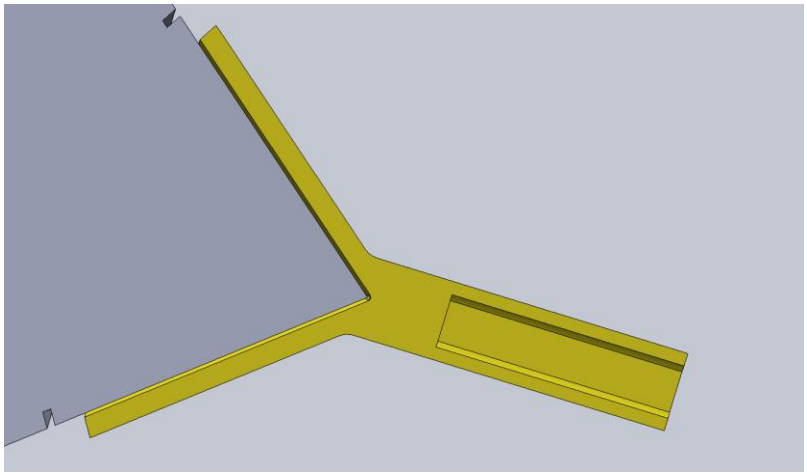

Skewb Solving Robot↗

October 2025 – December 2025

Task

- Design and build a robot using mostly VEX parts and electronics.
- Create a robot capable of solving a Skewb in under 1 minute with an 80% solve success rate.
- Write a technical report outlining project scope and design process.
- Collaborate with a four-person team to keep the project on schedule and meet deadlines.

Process

- Used SolidWorks to design the structure and custom 3D-printed parts.
- Wrote and helped tune a PID algorithm to improve the number of successful moves and increase solve speed.
- Refined the design to improve reliability by adjusting gripper geometry and adding additional bracing to the motors.

Result

- The Skewbot met and exceeded project goals, achieving solve times as fast as 13 seconds and a solve success rate of approximately 80%.
- The robot was presented to TAs, professors, and peers, who provided positive feedback.

Adam Turaj

Mechatronics Engineering Student
at the University of Waterloo

aturaj@uwaterloo.ca
adamturaj.com
linkedin.com/in/adam-turaj

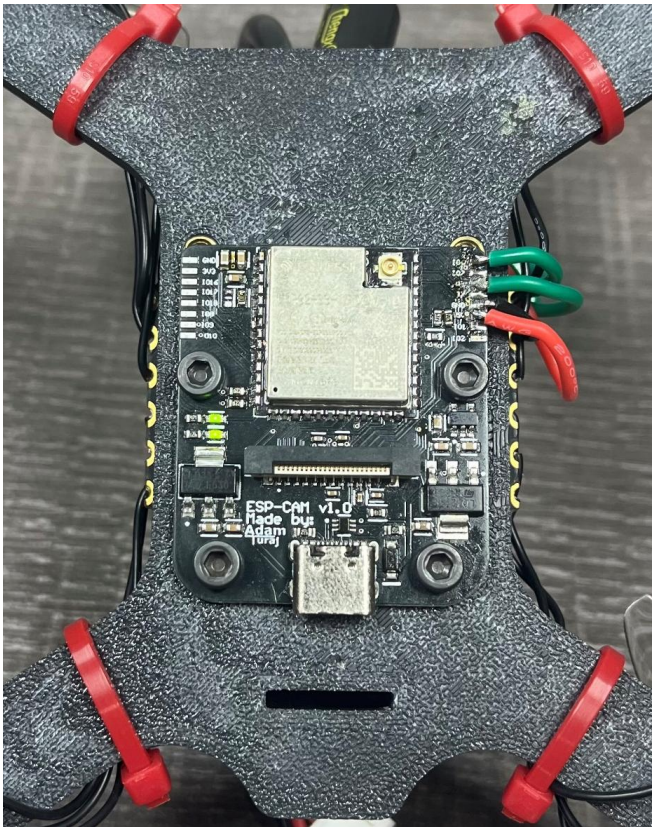

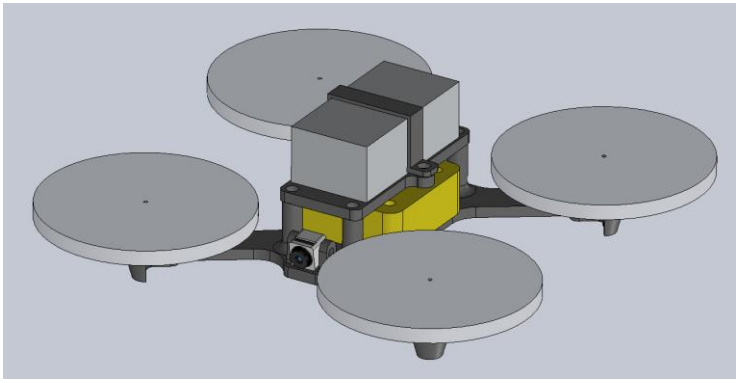

Gesture Controlled Drone↗

March 2026 – Present

Task

- Design a quadcopter drone that can be controlled using hand gestures.
- Enable the drone to follow a user, hover in place, and perform simple tricks.
- Improve safety by reducing the risk of crashing, striking people, or colliding with nearby objects.

Process

- Designed a custom 3D-printed frame in SolidWorks to minimize overall weight and size.
- Developed a compact PCB using Altium to relay camera footage to a Raspberry Pi and transmit movement commands to the flight controller.
- Used MediaPipe to interpret hand signals and surrounding obstacles.

Result

- Assembled drone weighed 219g, below the 250g unlicensed limit while maintaining an ideal thrust-to-weight ratio.
- Successfully flashed the custom board and validated GPIO control.
- CV models and control firmware in ongoing development with camera functionality as the next goal.

Adam Turaj

Mechatronics Engineering Student
at the University of Waterloo

aturaj@uwaterloo.ca
adamturaj.com
linkedin.com/in/adam-turaj

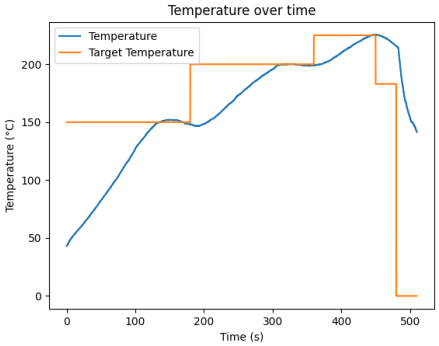

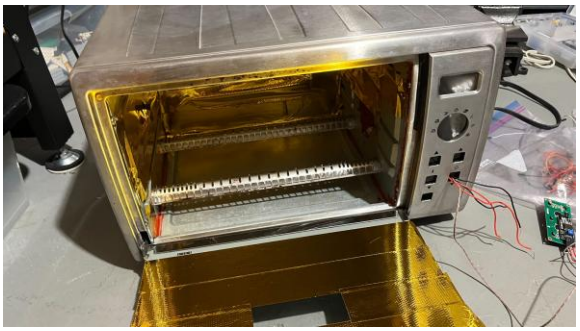

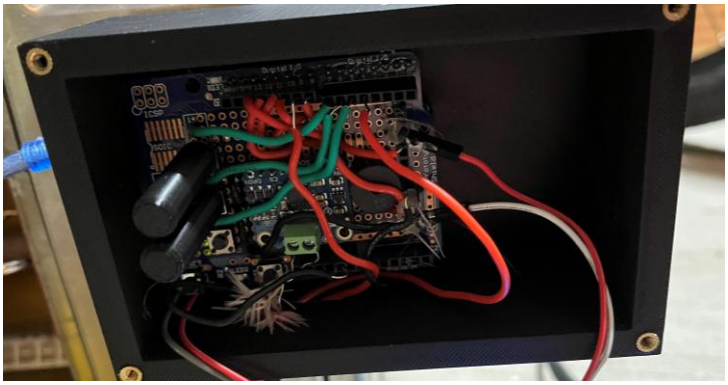

Example of board reflowed using the oven

Converted Reflow Oven↗

May 2024 – June 2024

Task

- Build a controllable reflow oven capable of following a basic reflow profile.
- Provide sufficient insulation to reach the temperatures required for lead-free solder.
- Create an intuitive user interface with fully customizable profiles.

Process

- Repurposed a used toaster oven and removed the stock electronics.
- Added insulation using reflective tape, high-temp gasket maker, and a fiberglass blanket.
- Routed the heating elements through an SSR to the AC mains.
- Integrated the SSRs, thermocouple, LCD, and buttons with an Arduino
- Developed control firmware in C++ using the Arduino IDE.

Result

- Successfully followed a reflow profile with repeatable temperature control.
- Repeatedly reflowed boards using lead-free solder.
- Delivered an intuitive user interface with fully customizable profiles.

Adam Turaj

Mechatronics Engineering Student
at the University of Waterloo

aturaj@uwaterloo.ca
adamturaj.com
linkedin.com/in/adam-turaj

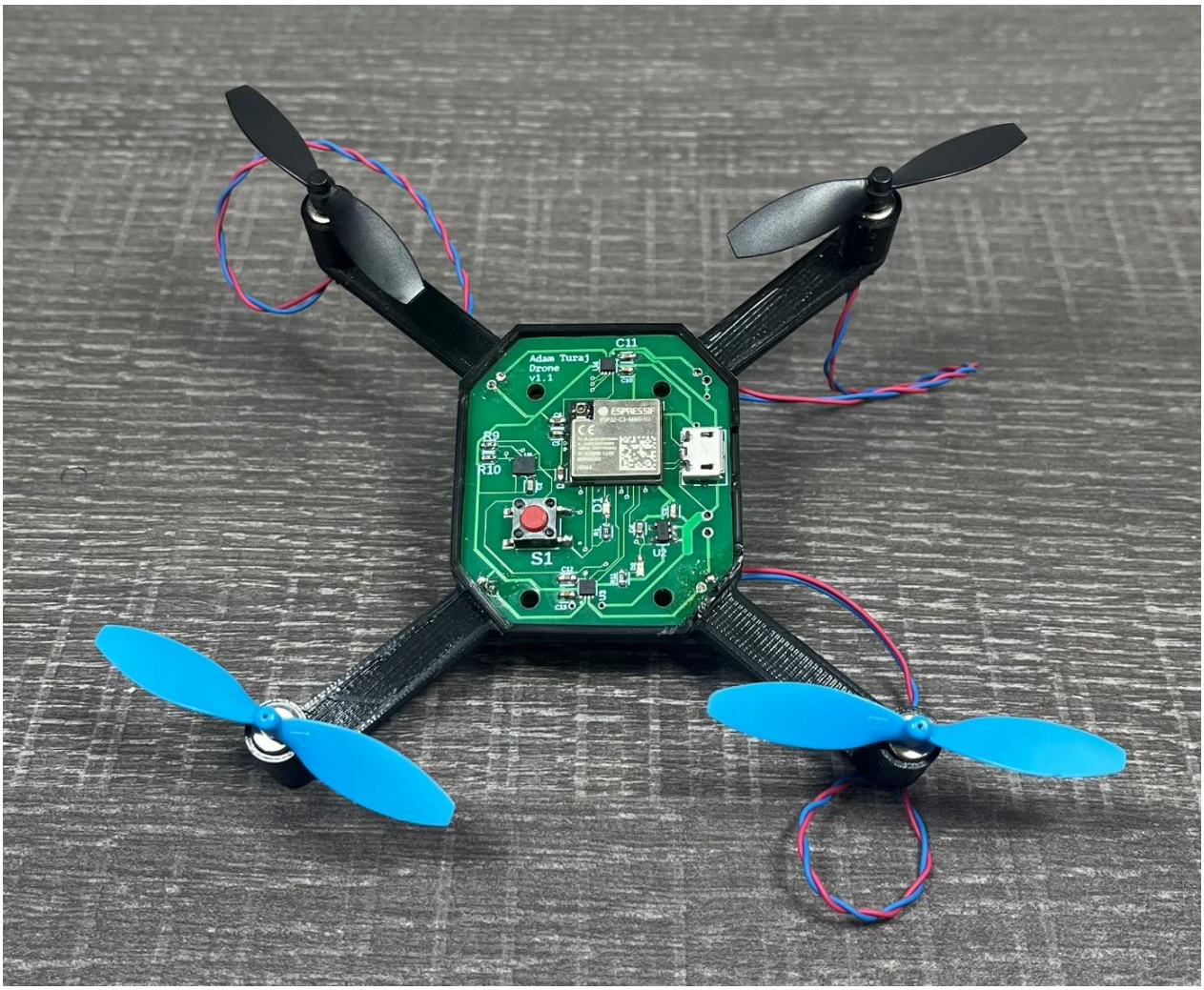

Fully Custom Drone↗

April 2023 – June 2023

Task

- Design, build, and program a quadcopter drone from the ground up using a minimal number of off-the-shelf components.
- Integrate an IMU for stabilized flight and an antenna for extended communication range.

Process

- Designed a custom flight controller PCB in Fusion360 Electronics which combines an IMU, motor drivers, and an ESP32.
- Created a simple frame with friction-fit motor mounts, integrated wiring paths and rigid PCB mounting.
- Developed basic flight-control software using Bluetooth for communication.

Result

- Achieved successful Bluetooth connection and basic motor control.
- Validated the custom electronics and overall system architecture through initial hardware testing.