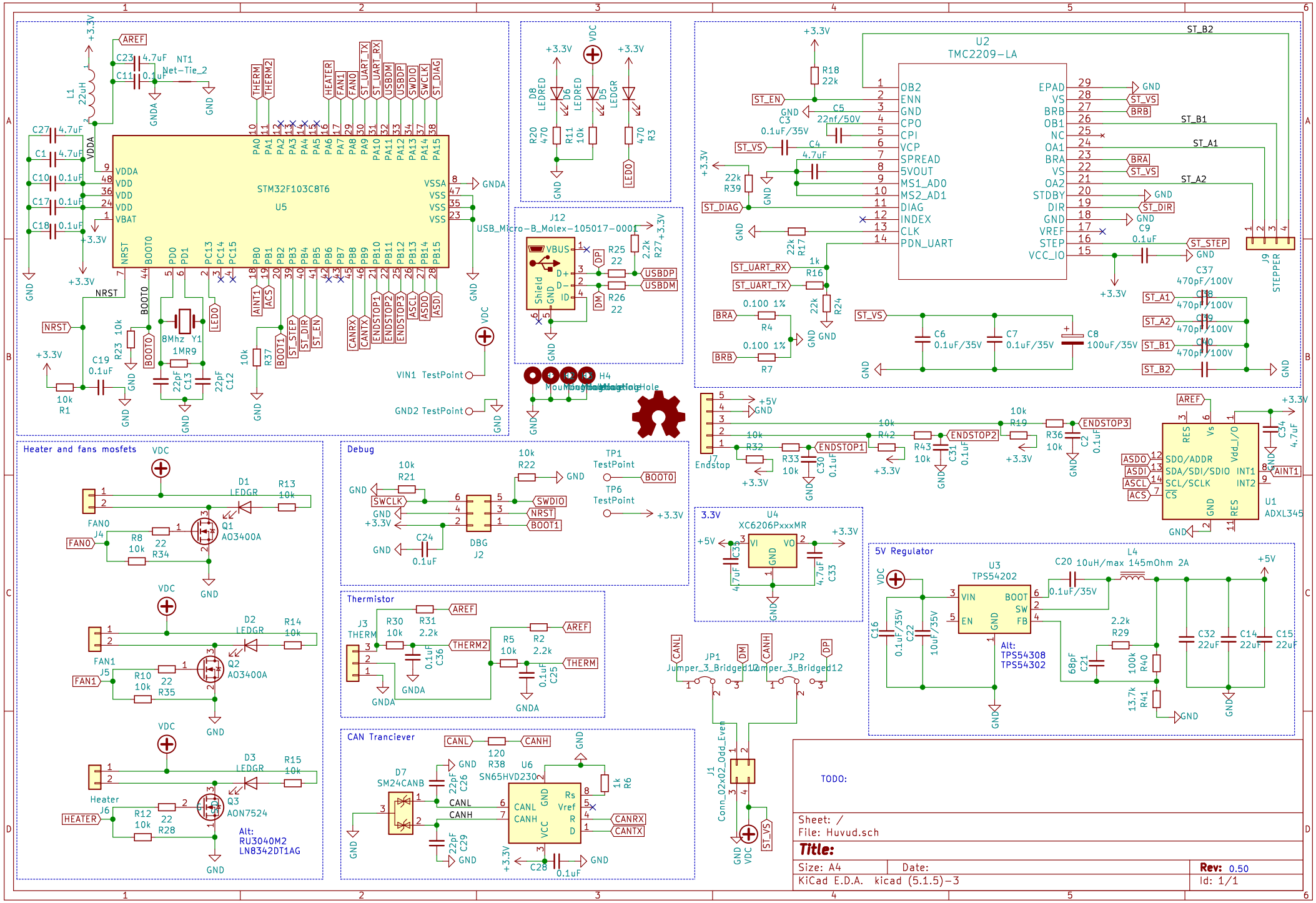
STM32F103C8T6
U5
U2
TMC2209-LA
J12
USB_Micro-B_Molex-105017-0001
J9
STEPPER
J7
Endstop
U1
ADXL345
U4
XC6206PxxxMR
U3
TPS54202
Alt:
TPS54308
TPS54302
L4
C20 10uH/max 145mOhm 2A
Heater and fans mosfets
Q1
AO3400A
Q2
AO3400A
Q3
AON7524
Alt:
RU3040M2
LN8342DT1AG
Debug
DBG
J2
Thermistor
J3
THERM
CAN Tranciever
D7
SM24CANB
U6
SN65HVD230
JP1
Jumper_3_Bridged12
JP2
Jumper_3_Bridged12
J1
Conn_02x02_Odd_Even
5V Regulator
TODO:
Sheet: /
File: Huvud.sch
Title:
Size: A4
Date:
Rev: 0.50
KiCad E.D.A. kicad (5.1.5)-3
Id: 1/1