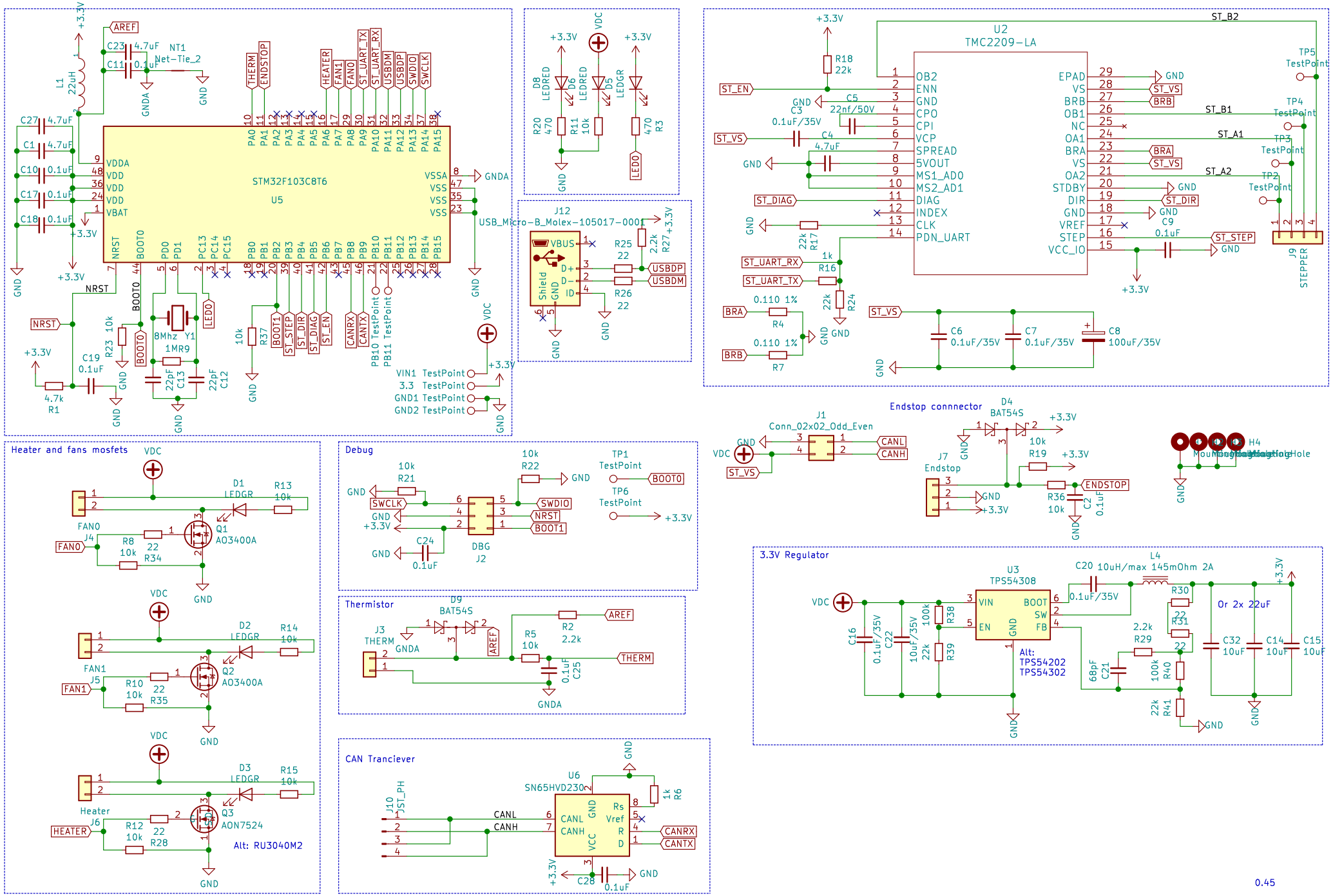
STM32F103C8T6
U5
U2
TMC2209-LA
J12
USB_Micro-B_Molex-105017-0001
J9
STEPPER
Heater and fans mosfets
Debug
DBG
J2
Thermistor
J3
THERM
CAN Tranciever
U6
SN65HVD230
J1
Conn_02x02_Odd_Even
Endstop connnector
J7
Endstop
3.3V Regulator
U3
TPS54308
Alt:
TPS54202
TPS54302
Or 2x 22uF
Alt: RU3040M2
0.45