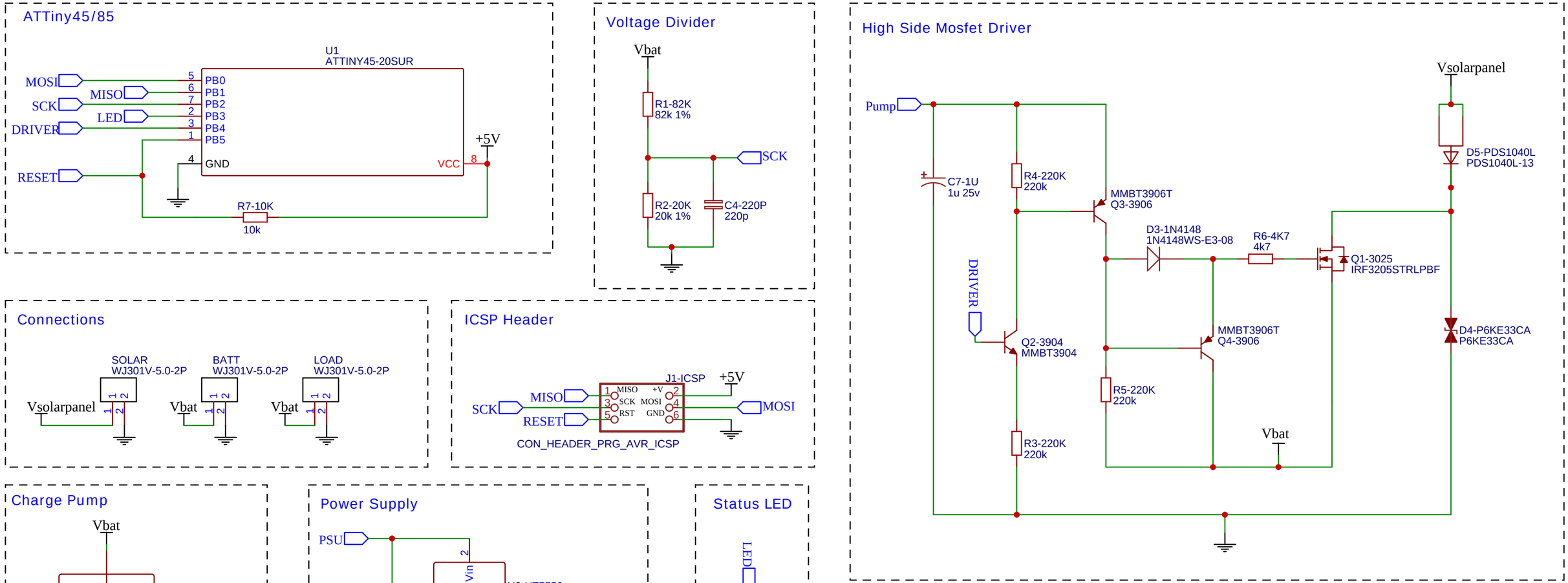

TITLE: PWM85 Solar Charge Controller	REV: 2.0
Date: 2019-10-07	Sheet: 1/1
EasyEDA V5.5.12	Drawn By: Adam Welch