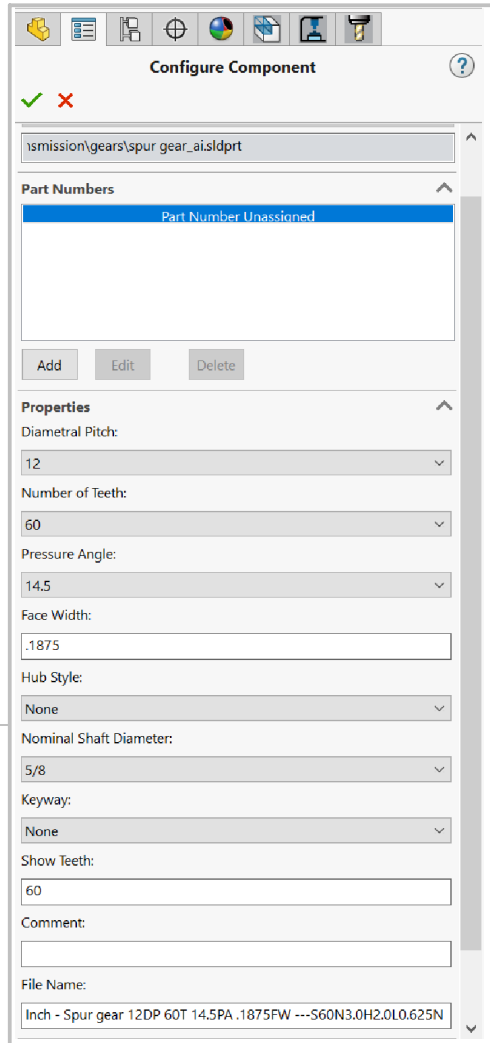

REVISIONS				
ZONE	REV.	DESCRIPTION	DATE	APPROVED

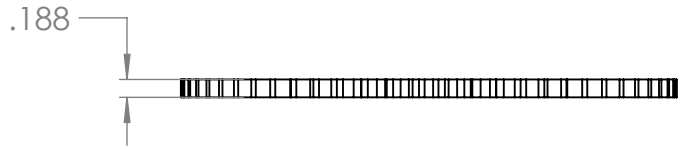

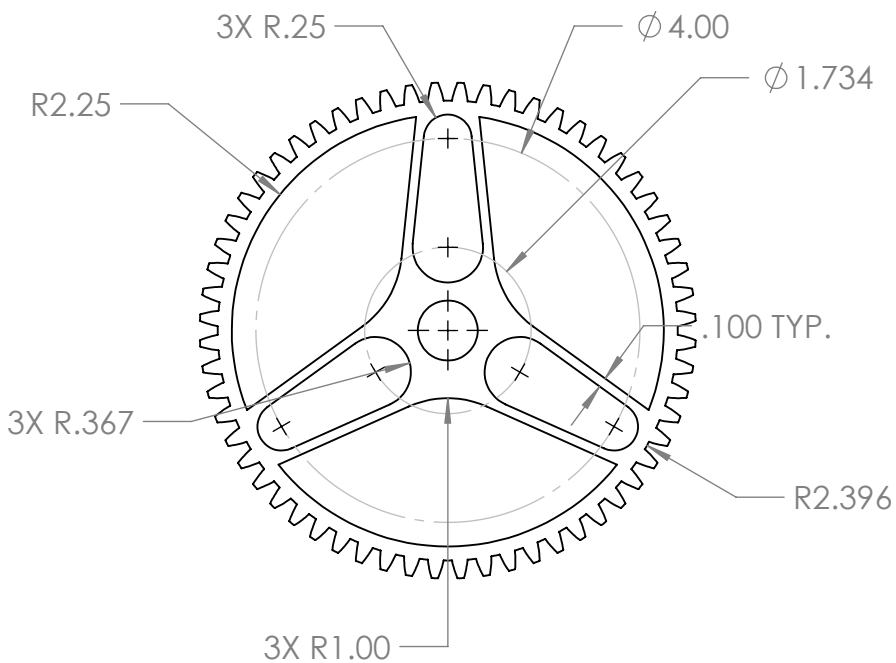

UNLESS OTHERWISE SPECIFIED:		NAME	DATE
DIMENSIONS ARE IN INCHES TOLERANCES: FRACTIONAL ±1/16 ANGULAR: MACH ± .5 BEND ±1 TWO PLACE DECIMAL ± .03 THREE PLACE DECIMAL ± .01	DRAWN	A.S.	11.26/2022
	CHECKED		
	ENG APPR.		
	MFG APPR.		
INTERPRET GEOMETRIC TOLERANCING PER:	Q.A.		
MATERIAL PVC 0.007 Plasticized	COMMENTS:		
FINISH			
DO NOT SCALE DRAWING			

A.S INDUSTRIES

TITLE:

PLANET GEAR

SIZE	DWG. NO.	REV
A	PG-001	-
SCALE: 1:2	WT: 0.0496	SHEET 1 OF 1

PROPRIETARY AND CONFIDENTIAL

THE INFORMATION CONTAINED IN THIS DRAWING IS THE SOLE PROPERTY OF A.S. INDUSTRIES. ANY REPRODUCTION IN PART OR AS A WHOLE WITHOUT THE WRITTEN PERMISSION OF A.S INDUSTRIES IS PROHIBITED.

NEXT ASSY	USED ON
APPLICATION	

SOLIDWORKS Educational Product. For Instructional Use Only.