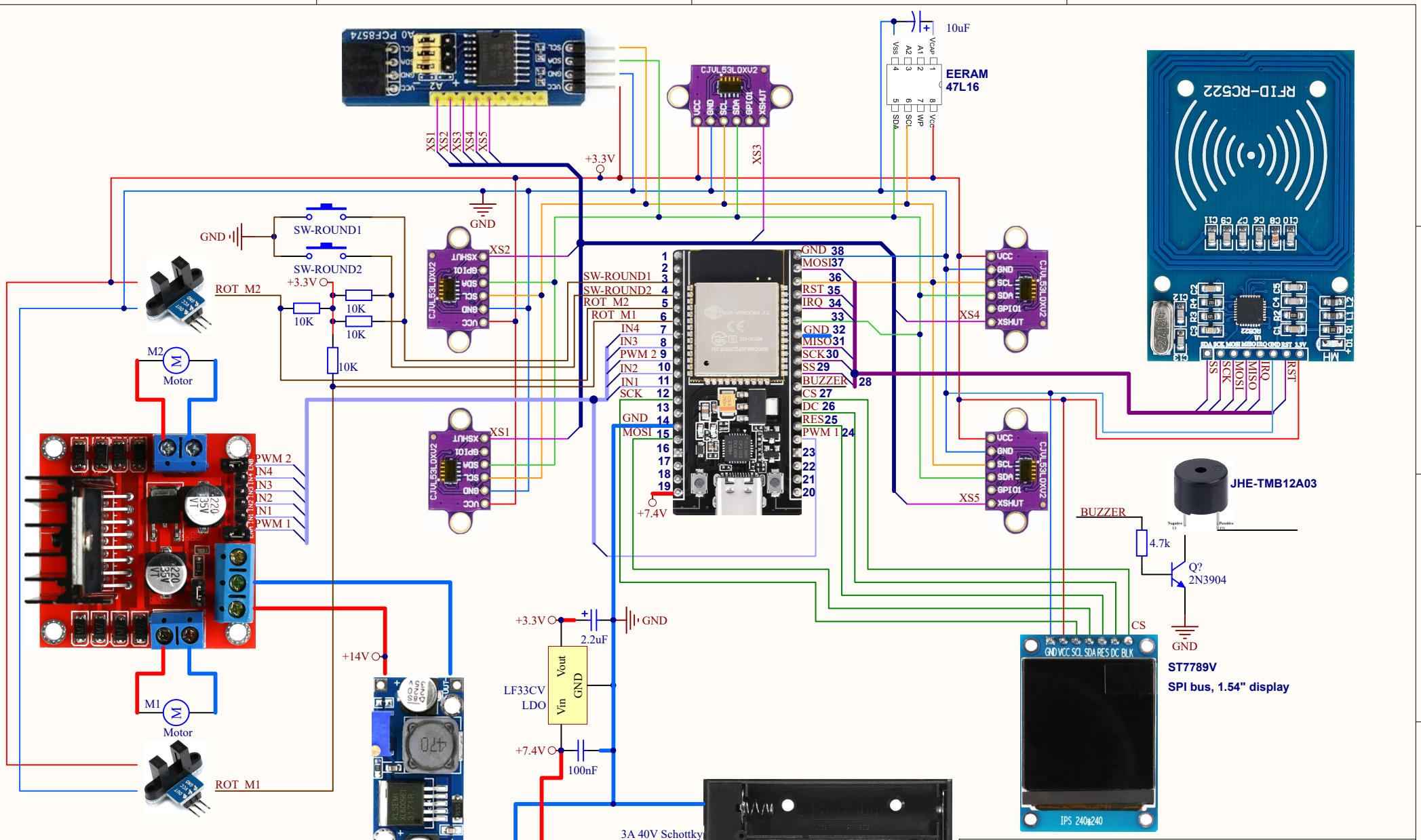
10uF
EERAM
47L16
XS1
XS2
XS3
XS4
XS5
+3.3V
GND
SW-ROUND1
SW-ROUND2
ROT_M2
ROT_M1
10K
M2
Motor
M1
Motor
PWM 2
IN4
IN3
IN2
IN1
PWM 1
+14V
+7.4V
LF33CV
LDO
Vout
Vin
2.2uF
100nF
3A 40V Schottky
SW-SPST
BUZZER
JHE-TMB12A03
4.7k
Q?
2N3904
CS
ST7789V
SPI bus, 1.54" display
IPS 240x240
RFID-RC522
SS
SCK
MOSI
MISO
IRQ
RST
Title
LABIRINTUS VERSENY v. 0.3
Size
A4
Number
Revision
Date: 2024. 06. 07.
Sheet of
File: C:\Users\..\Labirinth v03 pin.SchDoc
Drawn By: