Designs Carried out using Autodesk Inventor Professional 2022 and Fusion 360

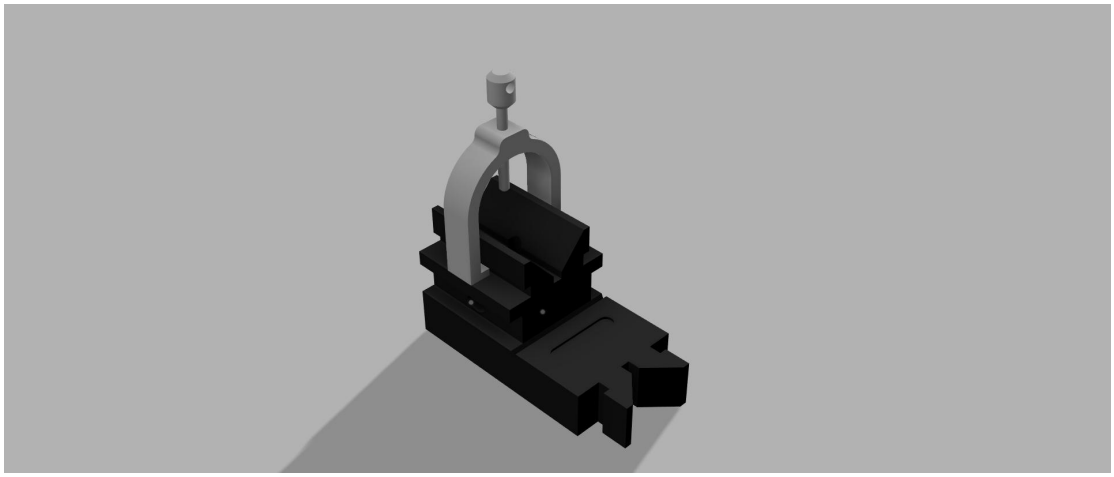

V-Block Assembly

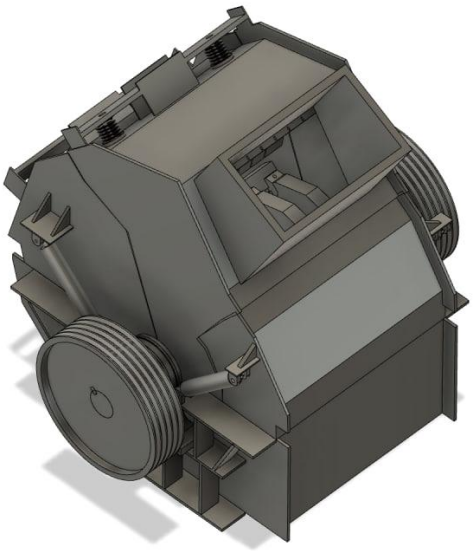

Impact Stone Crushing Machine

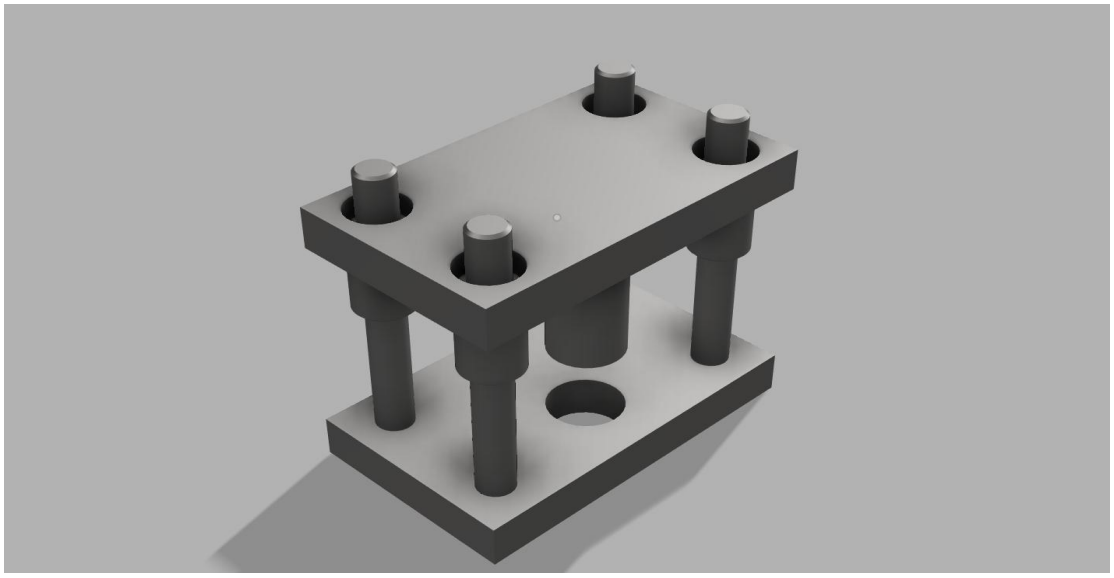

Press Tool Assembly

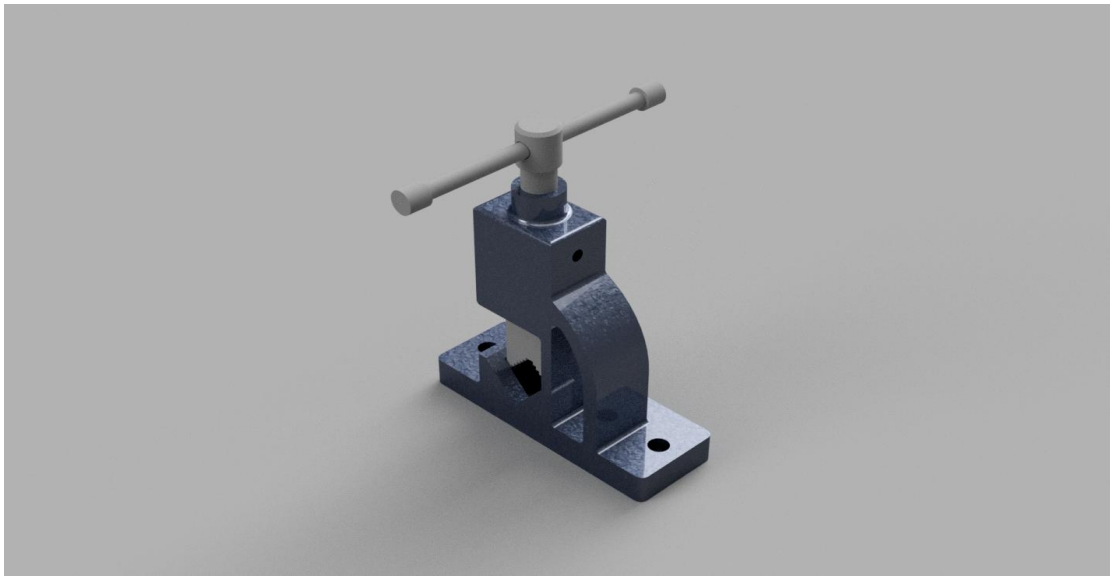

Pipe Vice Assembly

Custom Designed Katana/ Sword

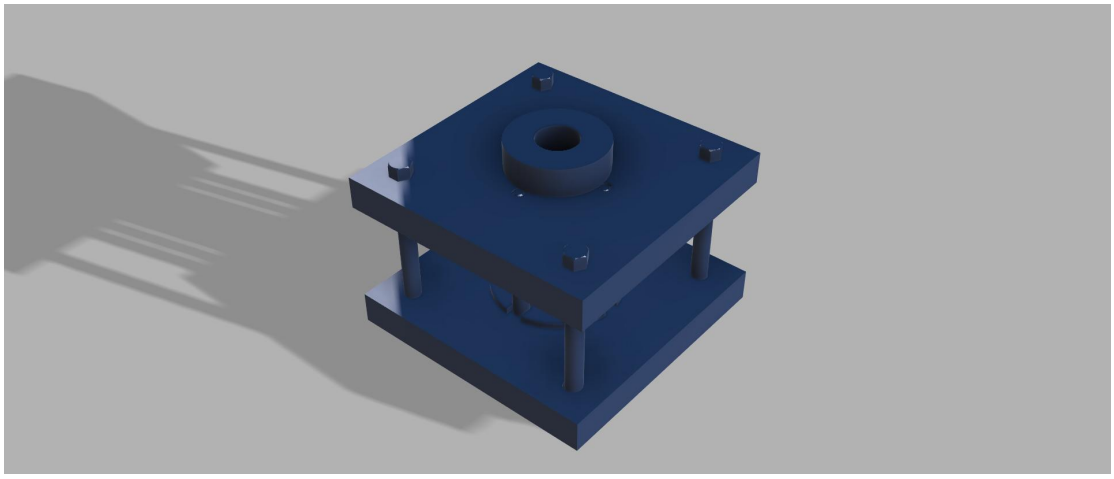

Fixture Assembly

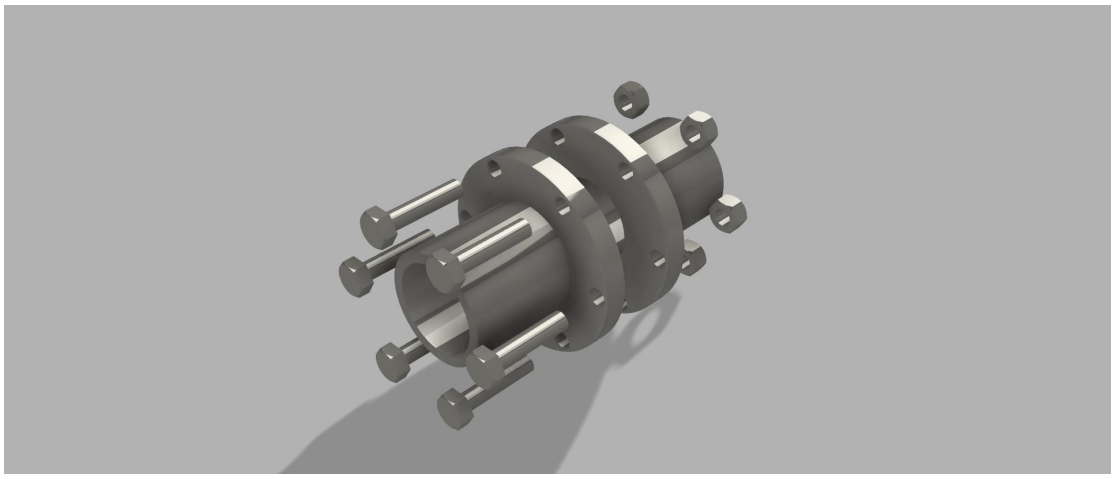

Exploded View of Flange Coupling Assembly

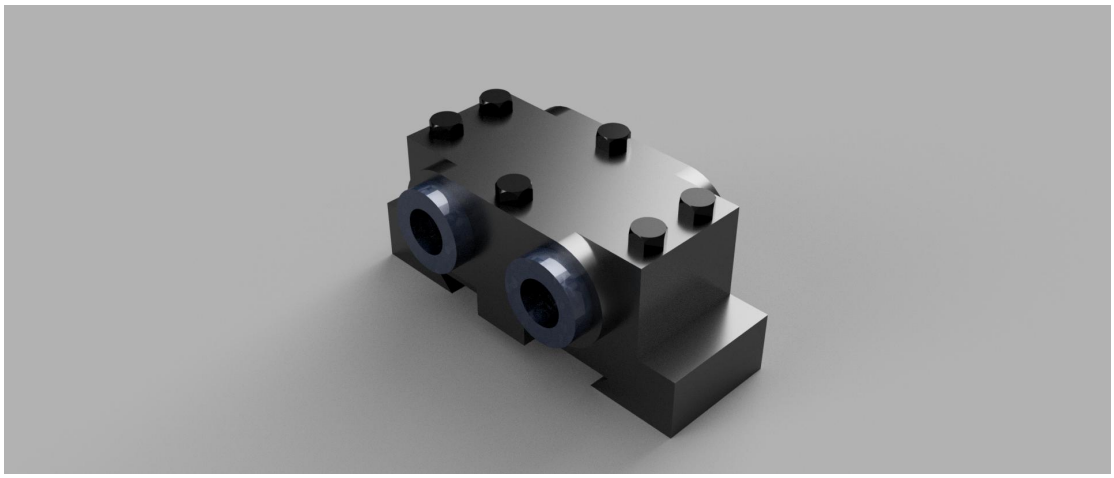

Double Bearing Assembly

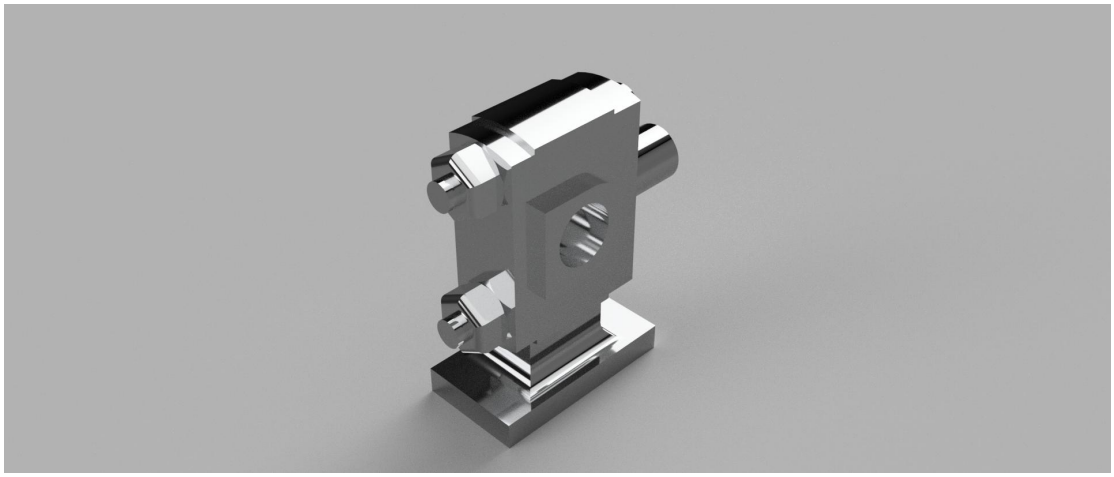

Cross Head Assembly

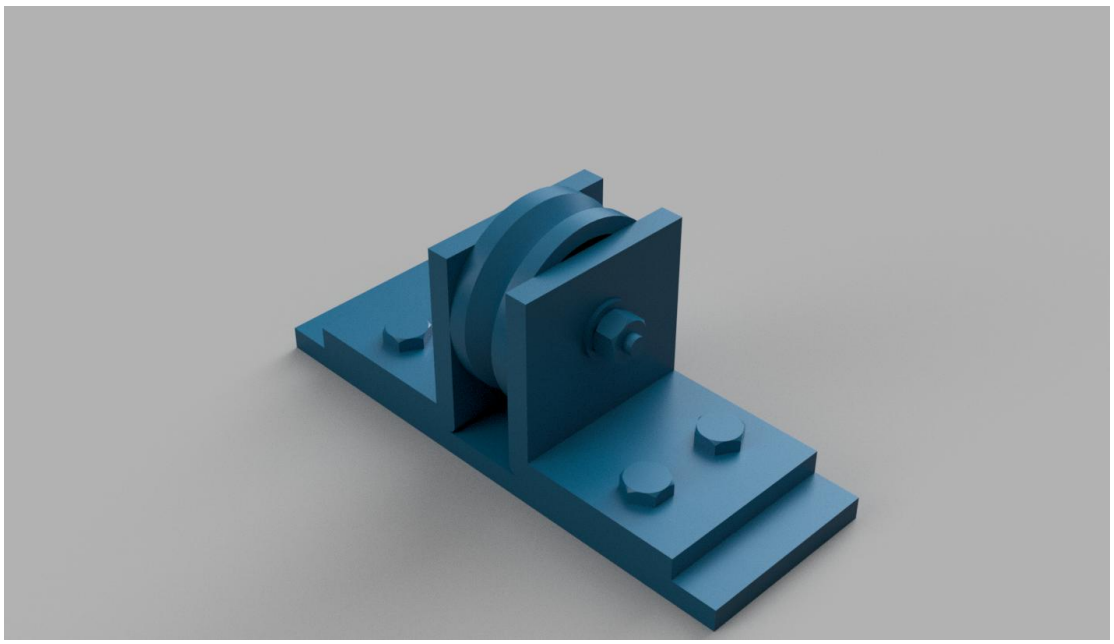

Wheel Support Assembly

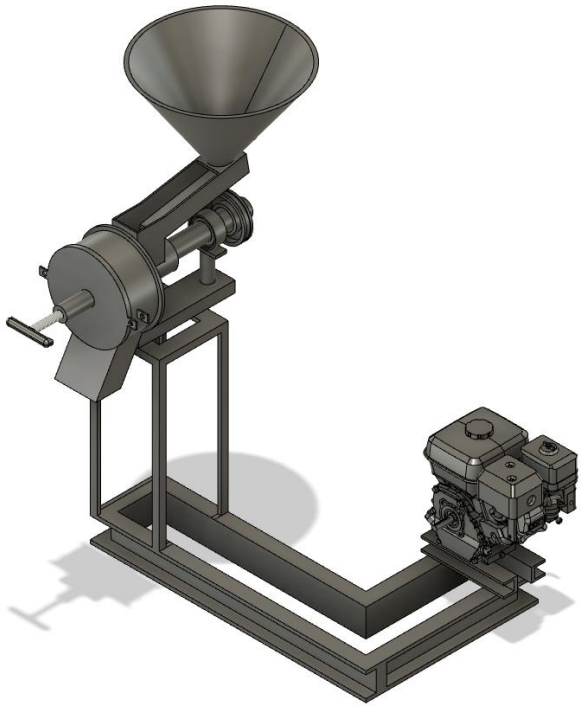

Assembly of a Petrol Engine Powered Grain Grinding Machine