PROJECTS

1. Design and Fabrication of a Grain Grinding Machine

Grain grinding is a common method for reducing harvested grain into flour. The importance of grinding grains into fine flour has a full advantage for homogeneity and size reduction for feed suitability. Traditionally, grain grinding is done using a saddle stone or mortar and pestle. These methods are all tedious, laborious, and time-consuming. Based on this backdrop, our project sought to design, construct, and evaluate a locally fabricated petrol engine-powered grain grinding machine that minimizes the use of traditional methods of grinding grain, which are laborious and time-consuming, and that is easy to operate with a high degree of efficiency.

The methodology was broken into 3 stages: the design process, the fabrication process, and the testing & evaluation process. The design of the machine was carried out using Autodesk Fusion. In designing the machine, the type of grain, output fineness & type of petrol engine were considered. The machine consists of main components that include the frame, the burrs (Grinding plate), petrol engine, grinding chamber, hopper, & belt and pulley. The components were assembled to obtain the required machine.

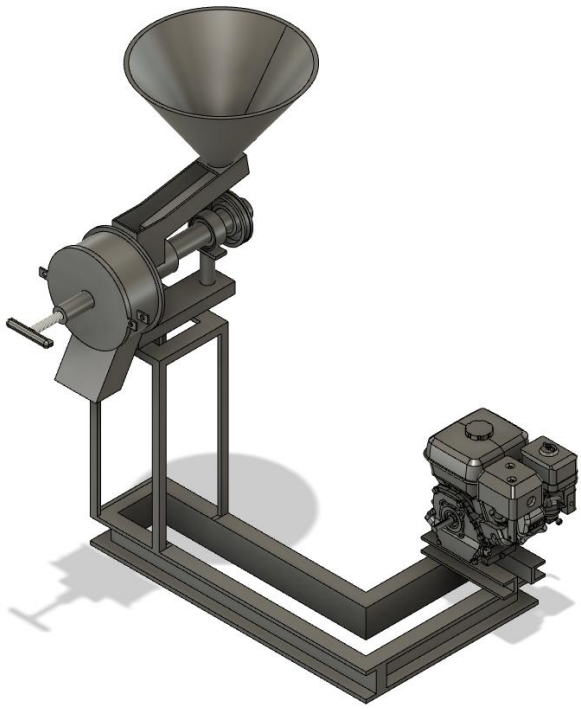

3D View of a Grain Grinding Machine

Fabricated Work of Grain Grinding machine

2. Developing a Hexacopter UAV with Retractable Landing Gear (In-progress)

The development of a hexacopter unmanned aerial vehicle (UAV) with retractable landing gear presents a valuable research opportunity in advanced aerial robotics, integrating aerodynamic optimization, mechatronic system design, and robust flight control. Compared to conventional multirotor platforms with fixed landing gear, a retractable system reduces aerodynamic drag during forward and translational flight, thereby improving energy efficiency, flight endurance, and operational stability. These improvements are particularly relevant for long-duration missions such as aerial mapping, infrastructure inspection, and autonomous surveying.

From a sensing and perception standpoint, retractable landing gear enables an unobstructed field of view for downward- and side-facing sensors, including cameras and LiDAR systems. This design facilitates higher-quality data acquisition for photogrammetry and environmental monitoring, while also allowing more flexible payload placement and center-of-gravity management. For a hexacopter platform, the increased payload capacity and inherent motor redundancy further enhance mission reliability, making it an ideal testbed for safety-critical aerial applications.

The proposed platform also supports research in mechatronics and control systems by introducing an actuated mechanism whose deployment and retraction must be coordinated with flight state estimation and mission logic. This allows investigation into fault-tolerant control, actuator reliability, and autonomous landing strategies under both nominal and off-nominal conditions. Additionally, airflow interactions between the propulsion system and retractable structures offer a practical context for studying multirotor aerodynamic interference effects.

Overall, this research contributes to the design of adaptable and efficient UAV platforms that bridge the gap between laboratory prototypes and real-world autonomous systems. The outcomes are expected to inform future developments in aerial robotics by demonstrating how integrated mechanical design and control strategies can enhance performance, robustness, and mission versatility in multirotor UAVs.

Assembly work of the hexacopter UAV

Assembly completed (awaiting flight controller)

3. Technical Report on the Design of The Impact Stone Crusher

Crushers are one of the main equipment used for reducing size in metallurgical, mechanical, and other similar industries. They exist in various sizes and capacities which range from 30 tons/hr. to 1000 tons/hr. They can be classified based on the degree to which they can fragment the starting material and the way they apply forces. Based on the mechanism used crushers are basically of three types; namely, Cone crusher, Jaw crusher, and Impact Crusher. The main objective is to design impact stone crusher. Impact stone crusher involves the use of impact rather than pressure to crush materials. The material is held within a cage, with openings of the desired size at the bottom, end or at sides to allow crushed material to escape through them. Impact stone crusher is used with soft materials, medium to hard stones and medium hard metallic ores. The principles used for impact loading is the time for the natural frequency of the body is much greater than with the time for applying force on materials. Since the hammer is rotating at a very high speed, the time for which the particles come in contact with the hammer is very small, hence impact loading is applied. The shaft is considered to be subjected to torsion and bending.

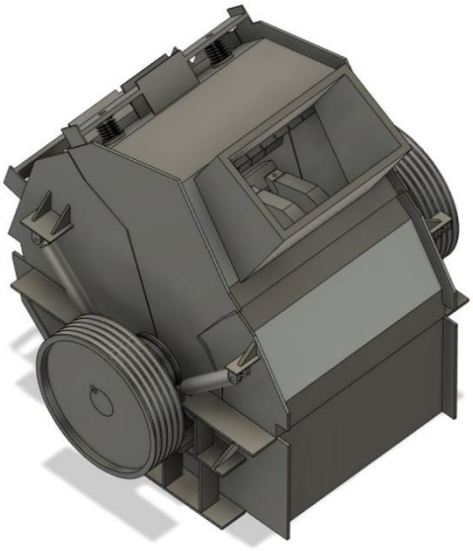

3D Model of a Crusher using Autodesk Fusion

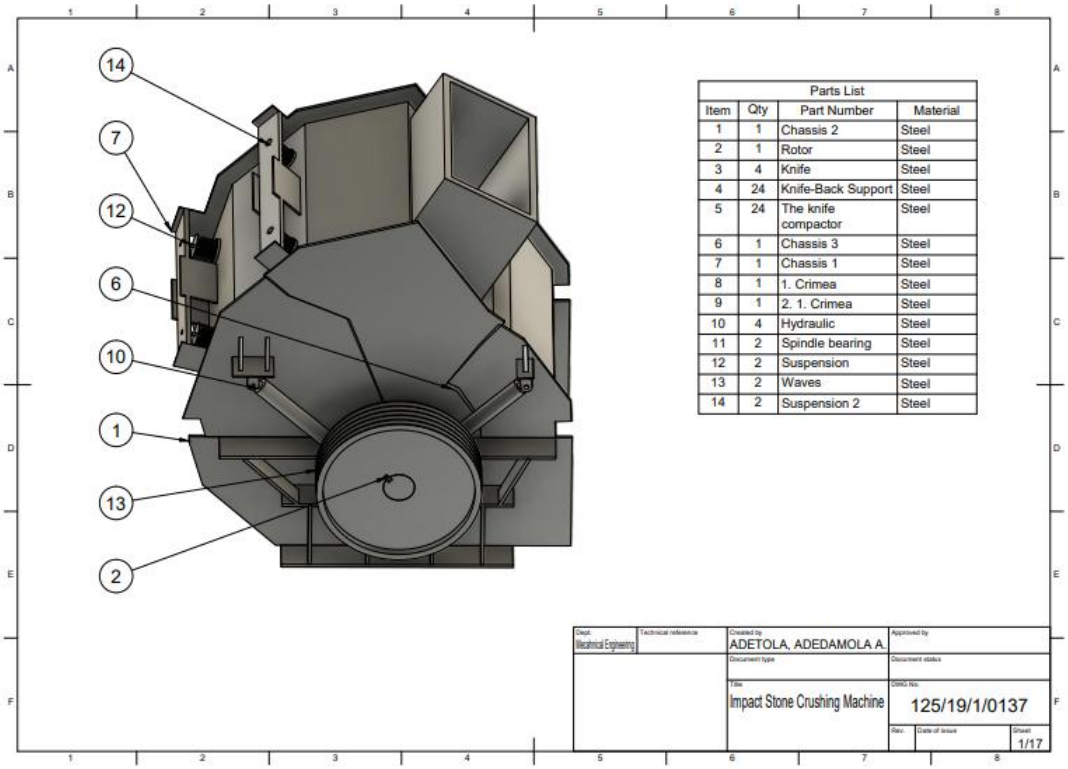

Sectional View with its part list using Autodesk Fusion

Machined Parts of A Guard booth using A Manual Lathe Machine