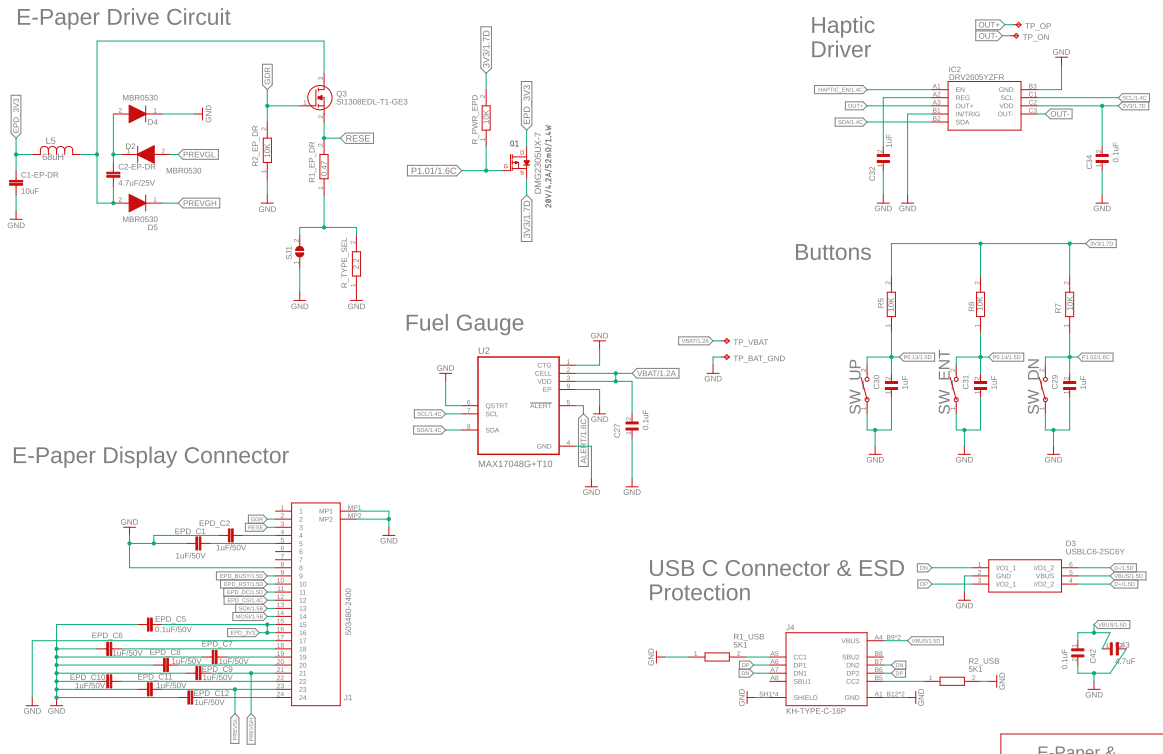

E-Paper & Pheripherals	drawn by: Adelina Alexe
	InkTime v6
	28.03.2026 21:12
	Sheet: 2/2

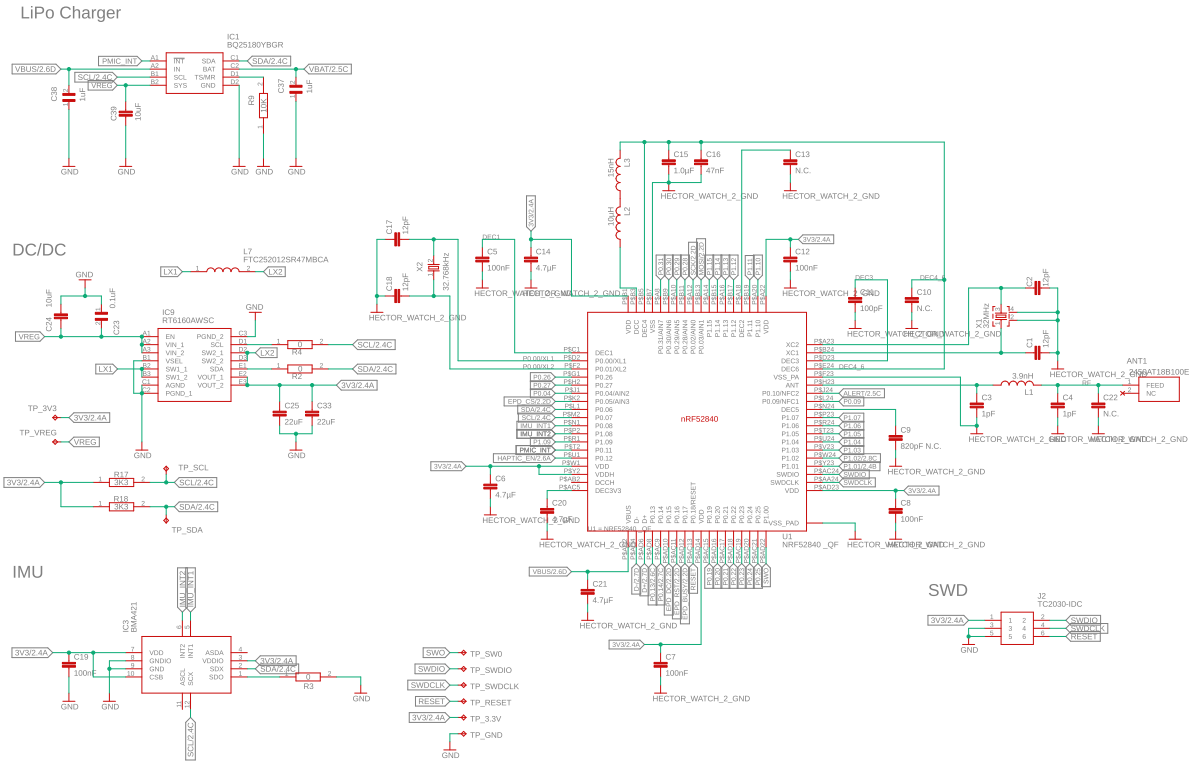

MCU, Power IMU, SWD	drawn by: Adelina Alexe
	InkTime v6
	28.03.2026 21:12
	Sheet: 1/2