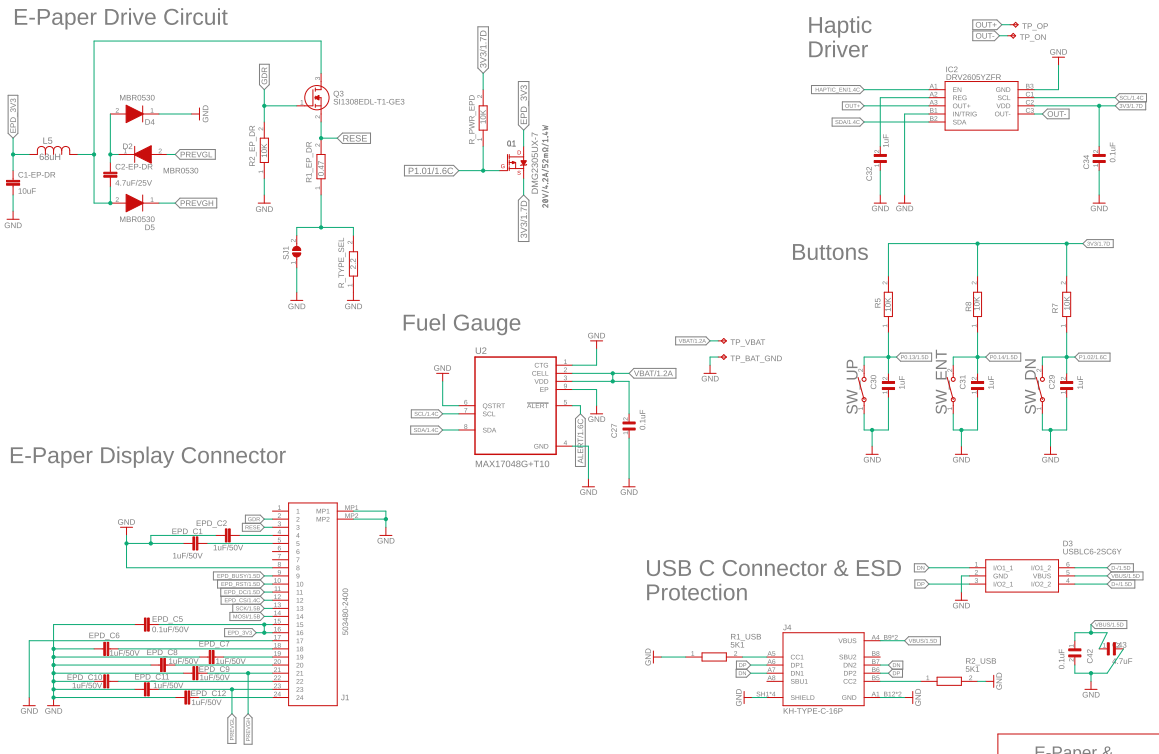
E-Paper Drive Circuit
EPD_3V3
L5
68uH
C1-EP-DR
10uF
GND
MBR0530
D4
D2
C2-EP-DR
4.7uF/25V
MBR0530
D5
PREVGL
PREVGH
GDR
R2_EP_DR
100k
R1_EP_DR
10k
Q3
SI1308EDL-T1-GE3
RESE
S11
R_TYPE_SEL
3V3/1.7D
R_PWR_EPD
100k
Q1
DMG2305UX-7
20V/4.2A/52mΩ/1.4W
P1.01/1.6C
Haptic Driver
IC2
DRV2605YZFR
OUT+
OUT-
TP_OP
TP_ON
HAPTIC_EN/1.4C
SCL/1.4C
SDA/1.4C
3V3/1.7D
C32
1uF
C34
0.1uF
Buttons
3V3/1.7D
R5
100k
R9
100k
R7
100k
SW_UP
SW_ENT
SW_DN
P0.13/1.5D
P0.14/1.5D
P1.03/1.6C
C30
C31
C29
1uF
Fuel Gauge
U2
CTG
CELL
VDD
EP
QSTRT
SCL
SDA
ALERT
GND
MAX17048G+T10
VBAT/1.2A
TP_VBAT
TP_BAT_GND
ALERT/1.4C
C27
0.1uF
E-Paper Display Connector
EPD_C1
1uF/50V
EPD_C2
1uF/50V
EPD_C5
0.1uF/50V
EPD_C6
EPD_C7
EPD_C8
EPD_C9
EPD_C10
EPD_C11
EPD_C12
1uF/50V
MP1
MP2
SG9480/2400
J1
EPD_BUSY/1.5D
EPD_RST/1.5D
EPD_DC/1.5D
EPD_CS/1.4C
SCK/1.5D
MOSI/1.5D
EPD_3V3
PREVGL
PREVGH
USB C Connector & ESD Protection
D3
USBLC6-2SC6Y
DM
DP
VBUS/3.5D
R1_USB
5K1
J4
KH-TYPE-C-16P
R2_USB
5K1
C42
0.1uF
C43
4.7uF
E-Paper & Pheripherals
drawn by: Adelina Alexe
InkTime v6
28.03.2026 21:12
Sheet: 2/2

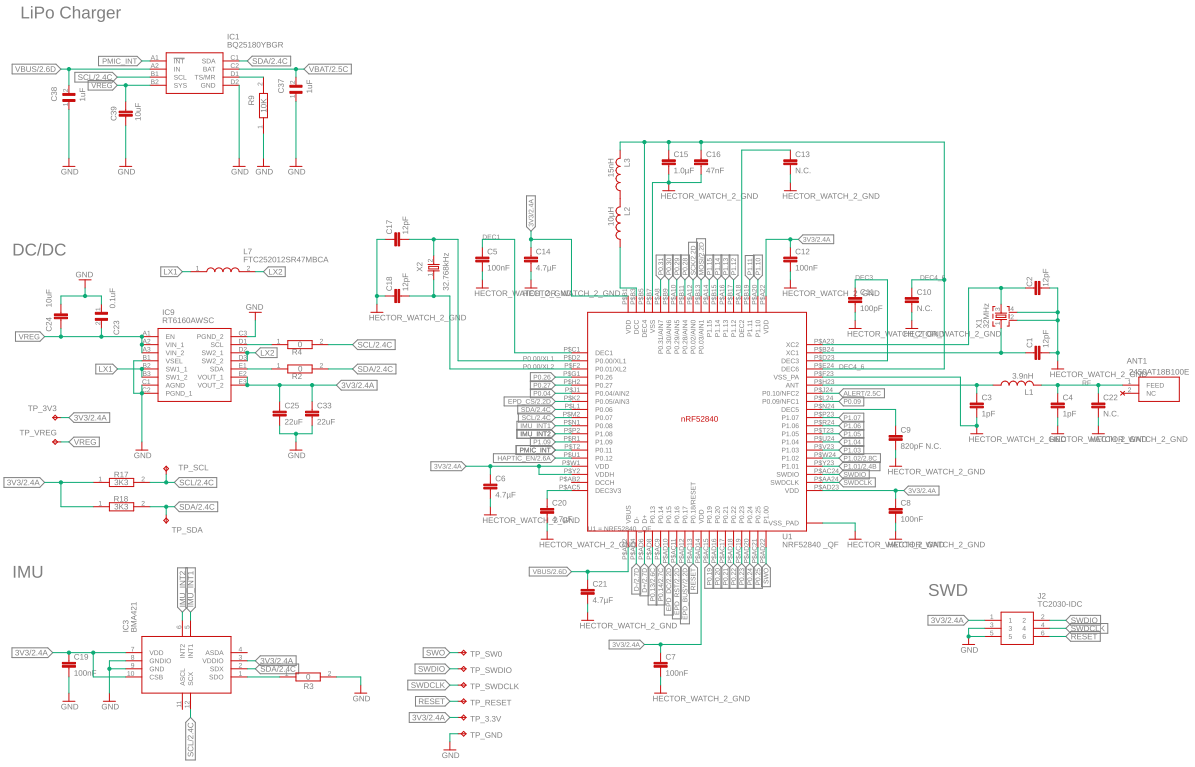

MCU, Power IMU, SWD	drawn by: Adelina Alexe
	InkTime v6
	28.03.2026 21:12
	Sheet: 1/2