06-2 Adding to the Kernel, Kernel Initialization

Adding to the Kernel

- Makefile Targets
- Kernel Configuration
- Custom Configuration Options
- Kernel Makefiles
- Kernel Documentation

Composite Kernel Image

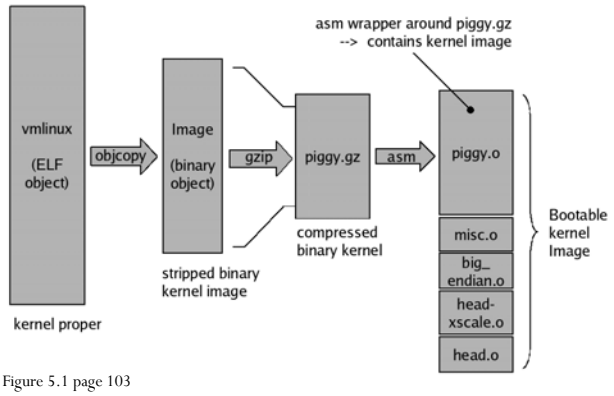

Figure 5.1 page 103

piggy.S

```
  .section .piggydata,#alloc
  .globl    input_data
input_data:
  .incbin   "arch/arm/boot/compressed/piggy.gz"
  .globl    input_data_end
input_data_end:
```

Bootstrap Loader (not bootloader)

- Prove context for kernel
  - Enable instruction set
  - Data caches
  - Disable interrupt
  - C runtime environment
- Decompress (misc.o)
- Relocate kernel image

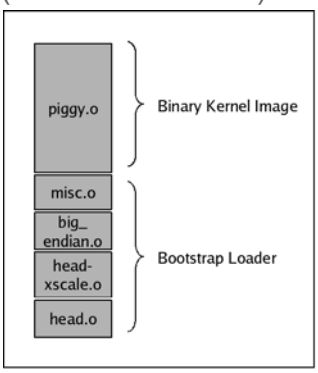

Figure 5-2 page 105

Boot Messages

- See handout
- Note *kernel version string*
- Note *kernel command line*

5-3 ARM boot control flow

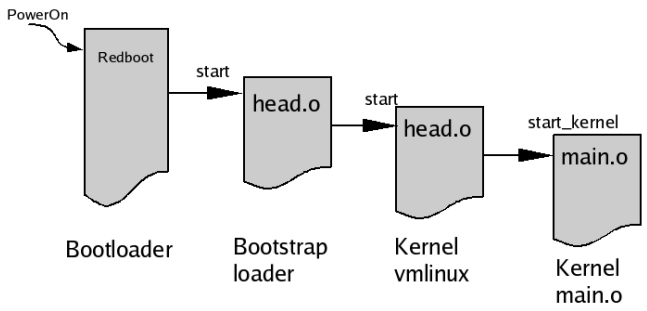

Booting Linux – ROM to Kernel

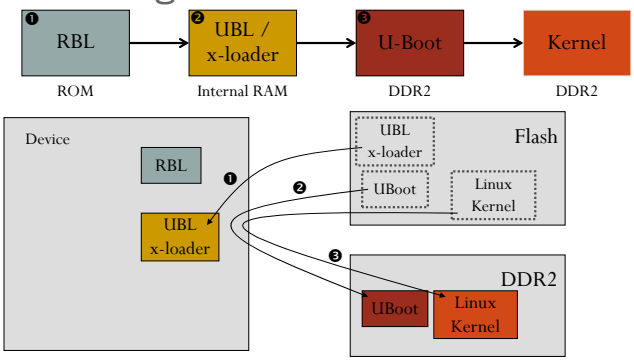

.../arch/arm/boot/compressed/head.S

```
#include <linux/linkage.h>

#ifdef DEBUG

#if defined(CONFIG_DEBUG_ICEDCC)

#ifdef CONFIG_CPU_V6
        .macro    loadsp, rb
        .endm
        .macro    writeb, ch, rb
        mcr       p14, 0, \ch, c0, c5, 0
        .endm
#else
        .macro    loadsp, rb
        .endm
        .macro    writeb, ch, rb
        mcr       p14, 0, \ch, c1, c0, 0
        .endm
#endif
#
#else

#include <mach/debug-macro.S>

        .macro   writeb,  ch, rb
        senduart \ch, \rb
        .endm

#if defined(CONFIG_ARCH_SA1100)
        .macro   loadsp, rb
        mov      \rb, #0x80000000 @
    physical base address
```

2 head.o's

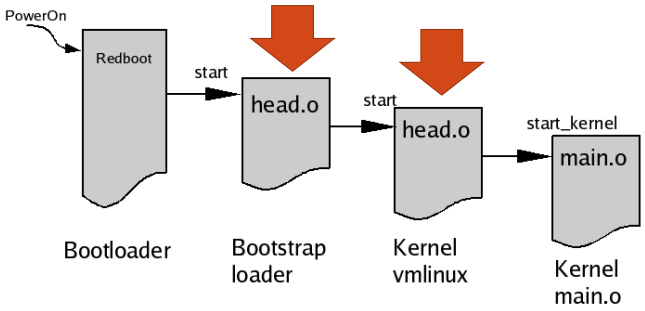

.../arch/arm/kernel/head.S

1. Checks of valid processor and architecture
2. Creates initial page table entries
3. Enables the processor's memory management unit (MMU)
4. Establishes limited error detection and reporting
5. Jumps to the start of the kernel proper, **`start_kernel()`** in **`main.c`**.

Find these on the handout

Kernel Startup

- **arch/arm/kernel/head.S**

`b start_kernel`

Find this by tomorrow

.../init/main.c

```
asmlinkage void __init start_kernel(void)
{
   char * command_line;
   extern struct kernel_param __start___param[], __stop___param[];

   smp_setup_processor_id();

   /*
    * Need to run as early as possible, to initialize the
    * lockdep hash:
    */
   lockdep_init();
   debug_objects_early_init();
   cgroup_init_early();

   local_irq_disable();
   early_boot_irqs_off();
   early_init_irq_lock_class();
```

Kernel Command Line Processing

- Read 5.3 on Kernel Command-Line Processing
- It presents the **`__setup`** macro

```
console=ttyS2,115200n8 mem=80M@0x80000000
  mem=384M@0x88000000 mpurate=1000
  buddy=none camera=lbcm3m1 vram=16M
  omapfb.vram=0:8M,1:4M,2:4M
  omapfb.mode=dvi:hd720
  omapdss.def_disp=dvi root=/dev/mmcblk0p2
  rw rootfstype=ext3 rootwait
```

Console Setup Code Snippet

```
/*
* Setup a list of consoles. Called from init/main.c
*/
static int __init console_setup(char *str)
{
char buf[sizeof(console_cmdline[0].name) + 4]; /* 4 for index */
char *s, *options, *brl_options = NULL;
int idx;
...
<body omitted for clarity...>
...
return 1;
}
__setup("console=", console_setup);
```

.../include/linux/init.h

```
/*
 * Only for really core code.  See moduleparam.h for the normal way.
 *
 * Force the alignment so the compiler doesn't space elements of the
 * obs_kernel_param "array" too far apart in .init.setup.
 */
#define __setup_param(str, unique_id, fn, early)            \
   static char __setup_str_##unique_id[] __initdata __aligned(1) = str;
                                                            \
   static struct obs_kernel_param __setup_##unique_id       \
         __used __section(.init.setup)                      \
         __attribute__((aligned((sizeof(long)))))           \
         = { __setup_str_##unique_id, fn, early }

#define __setup(str, fn)                                    \
   __setup_param(str, fn, fn, 0)
```

__setup

```
__setup("console=", console_setup);
```

- Expands to

```
static const char __setup_str_console_setup[] __initconst \
__aligned(1) = "console=";
static struct obs_kernel_param __setup_console_setup __used \
__section(.init.setup) __attribute__
((aligned((sizeof(long))))) \
= { __setup_str_console_setup, console_setup, early};
```

- Which expands to

```
static struct obs_kernel_param __setup_console_setup \
__section(.init.setup) = { __setup_str_console_setup,
console_setup, early};
```

- This stores the code in a table in section **`.init.setup`**.

On initialization...

- The table in **`.init.setup`** has
  - Parameter string ("**`console=`**") and
  - Pointer to the function that processes it.
- This way the initialization code can processing everything on the command line without knowing at compile time where all the code is.
- See section 5.3 for more details.