Biopotentials

Introduction to Measure them

Introduction to Biopotentials

- Neural Impulses conducted by Axons
- Measures axon action potential firing

- EEG: Measures the firing of neurons in brain/spinal cord
- EMG: Measures voltage of neuromuscular junctions in muscle fibres
- ECG: Measures action of nodal conductive pathways the heart

- 0.5-500Hz Signal characteristics, 5uV-10mV amplitud

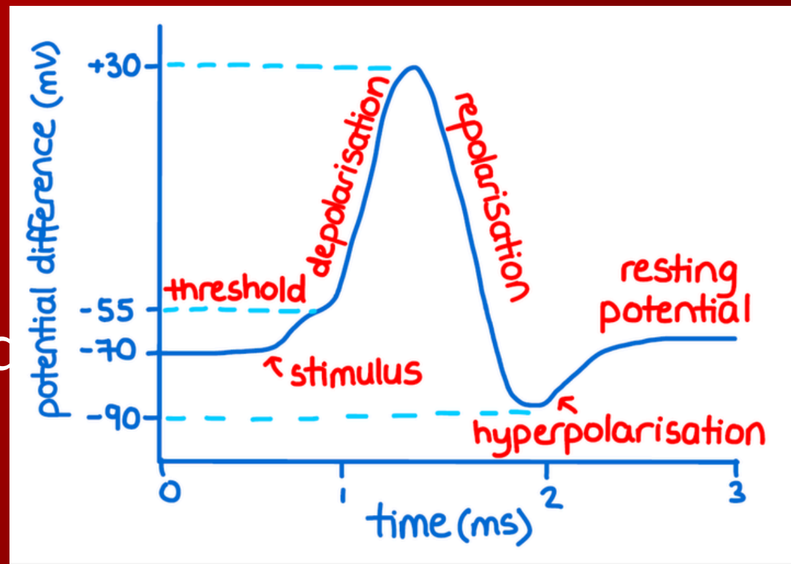

Analog-to-Digital Converter (ADC)

- Maps an arbitrary supply voltage into a binary value
- Incredibly Useful for digital processing with CPU

- Arduino UNO: Successive Approximation
  - Delta-Sigma ADCs also commonly used for Biopot.
- Series of comparisons with increasing accuracy
- 10bit resolution (0-1023) at 5V supply
- Up to 9.6kHz sampling rate in normal operation

- Note: 0.5-500Hz Signal characteristics, 5uV-10mV amplitude
- What happens if we feed the raw signal?

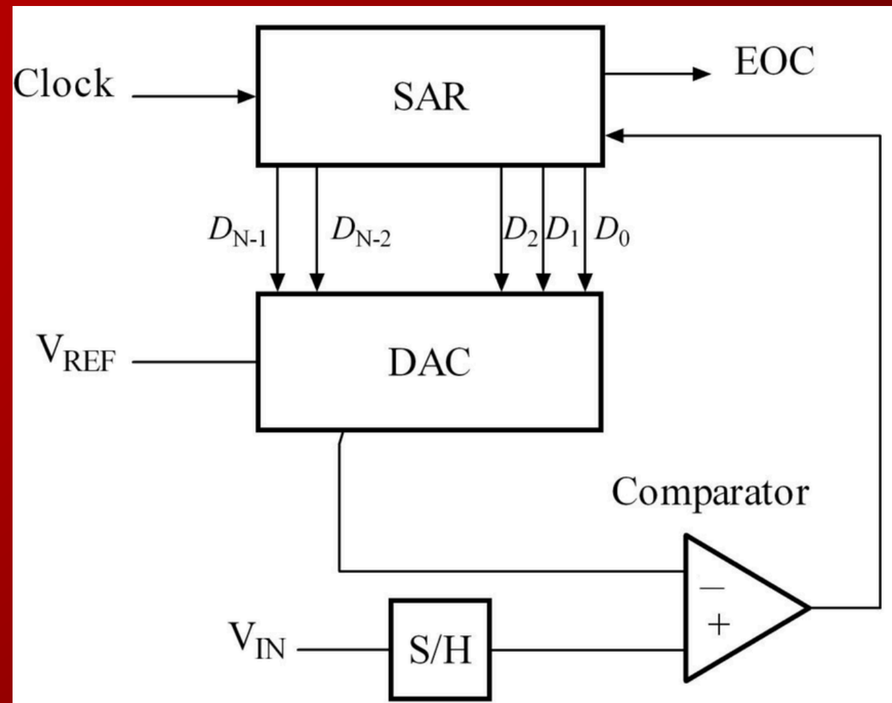

EEG

- 4 dry EEG sensors on forehead + behind ears — no gel needed
- Streams data via Bluetooth at 256Hz sampling rate
- **Outputs:** raw EEG, FFT band powers, accelerometer, heart rate (PPG)
- **Use cases:** meditation feedback, sleep staging, focus training, BCI research
- **Brainwave bands visible:** Delta (sleep), Theta (drowsy), Alpha (calm), Beta (focused), Gamma (high cognition)
- Compatible with MNE-Python, Lab Streaming Layer (LSL), Mind Monitor app

MUSE S Athena

gtec Medical Engineering

EMG

- **MyoWare 2.0** — fully integrated EMG sensor (amplifier + rectifier + filter on one board)
- **Outputs two signals:** RAW (full waveform, ±VCC) and RECT/ENV (envelope, 0 to VCC)
- **Operating voltage:** 2.9V–5.7V — works directly with Arduino 5V
- **Electrode spacing:** snap connectors accept standard Ag/AgCl snap electrodes
- **Signal bandwidth:** 20–500Hz (built-in bandpass)
- Gain is adjustable via the onboard potentiometer
- Connect ENV output → Arduino A0 for clean amplitude signal

LINK To Buy MyoWare

ECG

- **AD8232** — single-lead heart rate monitor IC with built-in instrumentation amp + right-leg drive
- **Pins used:** OUTPUT → A0, LO+ / LO− → D10/D11 (lead-off detection), 3.3V, GND
- **Built-in filters:** HPF at 0.5Hz (removes baseline wander) + LPF at 40Hz (removes EMG noise)
- **Lead configuration shown:** Einthoven's Triangle — RA (right arm), LA (left arm), LL (left leg/reference)
- **For workshop:** place RA on right collarbone, LA on left collarbone, LL on lower left abdomen
- **Output:** clean PQRST waveform readable directly by Arduino ADC

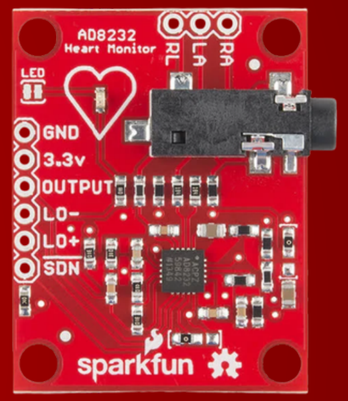

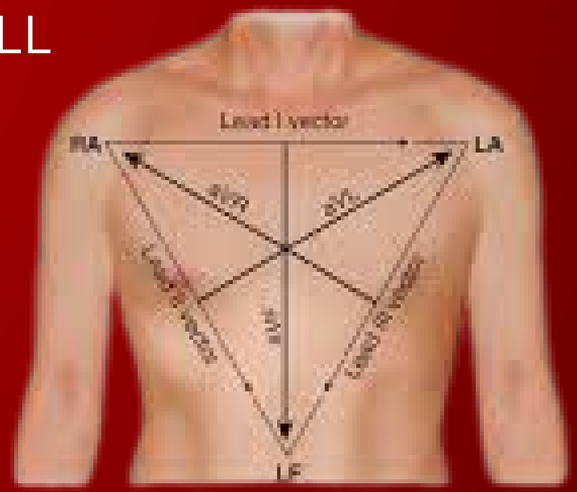

Guide to ECG

CODING TIME

SCAN ME

SIGNAL CONDITIONING

Stage	Problem it solves	Component	Key spec	Signal after
Amplification	5μV too small for ADC (needs ~1V)	INA326 / INA128	Gain = 1000×	5mV → 5V
High-pass filter	DC offset / baseline wander from breathing	RC filter (C + R)	fc = 0.5 Hz	Drift removed
Low-pass filter	High-frequency noise above signal band	RC or op-amp LPF	fc = 500 Hz (EMG)	HF noise cut
Notch filter	50/60 Hz power-line interference from walls	Twin-T or active notch	f = 50 Hz or 60 Hz	Mains hum gone
Bias (VCC/2)	Arduino ADC can't read negative voltages	Voltage divider or op-amp	2.5V midpoint	Signal centred at 2.5V

Signal Processing

- Performed either on-chip or on an external workstation
- Processing several thousand samples is difficult
- Typically done via Fast Fourier Transform analysis
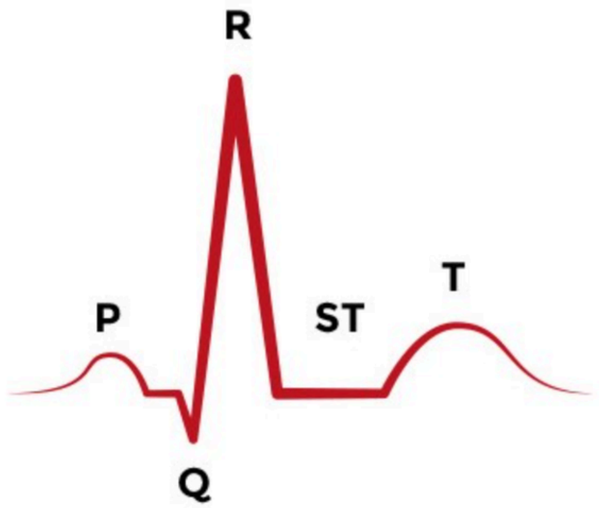
- EEG: Relative ratio of Alpha, Beta, Delta, Theta waves
  - Alpha (8-13Hz), Beta(13-30Hz), Delta(0.5-4Hz)
  - E.g. High Beta => stress, high delta => good sleep
- EMG: Windowing and quantitative analysis
  - RMS of EMG amplitude proportional to force
- ECG: Different QRS, S-T, P-R Lengths are indicators
  - E.x: Long S-T can indicate heart attack
  - Other analyses for arrythmia, hypercontraction