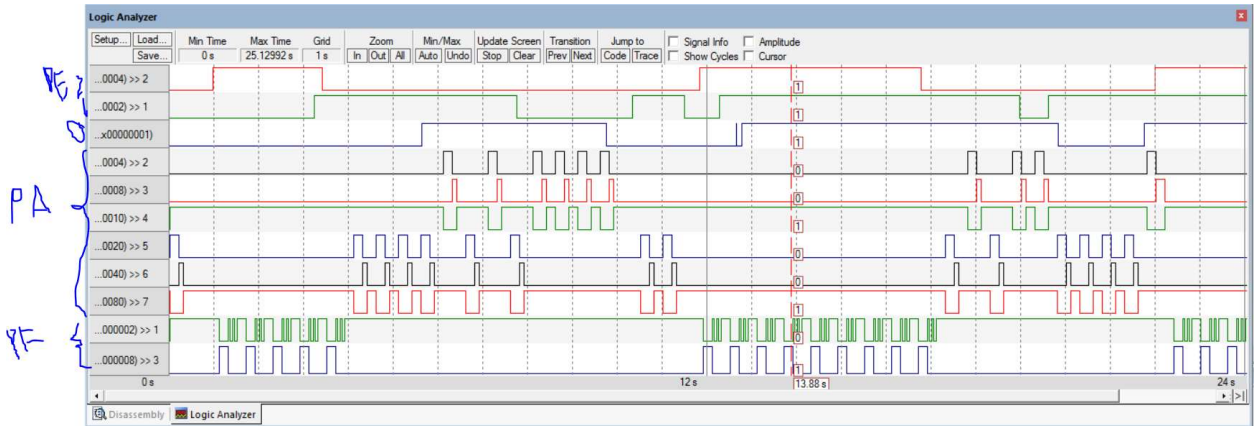
Logic Analyzer
Setup... Load... Save...
Min Time 0 s
Max Time 25.12992 s
Grid 1 s
Zoom In Out All
Min/Max Auto Undo
Update Screen Stop Clear
Transition Prev Next
Jump to Code Trace
Signal Info
Show Cycles
Amplitude
Cursor
...0004) >> 2
...0002) >> 1
...x00000001)
...0004) >> 2
...0008) >> 3
...0010) >> 4
...0020) >> 5
...0040) >> 6
...0080) >> 7
...000002) >> 1
...000008) >> 3
PA
PF
0 s
12 s
13.88 s
24 s
Disassembly
Logic Analyzer

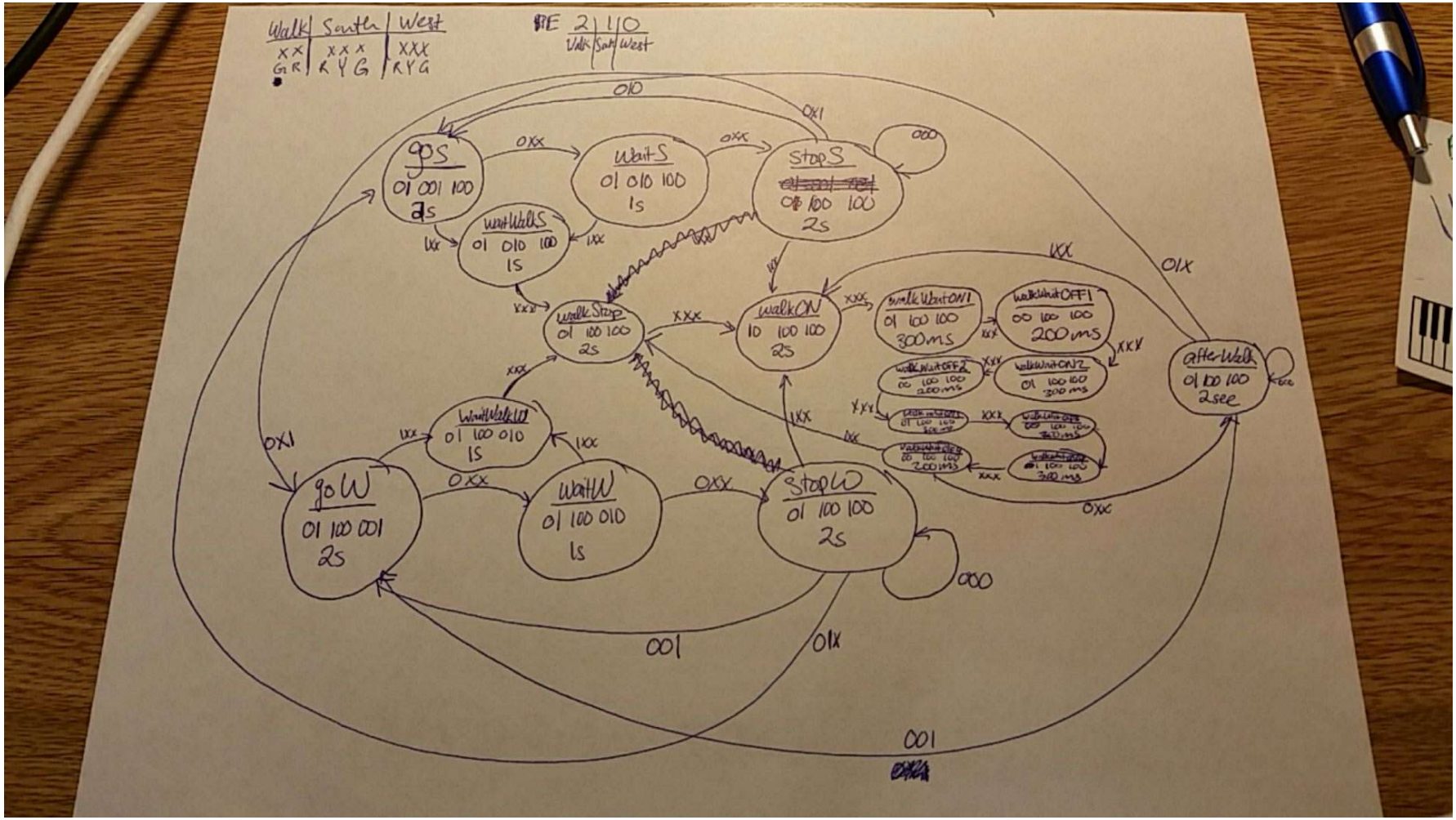
Walk | South | West
XX | XXX | XXX
GR | RYG | RYG
PE 2 | 1 | 0
Walk | South | West
goS
01 001 100
2s
waitS
01 010 100
1s
stopS
01 100 100
2s
waitWalkS
01 010 100
1s
walkStop
01 100 100
2s
walkON
10 100 100
2s
walkWaitON1
01 100 100
300ms
walkWaitOFF1
00 100 100
200ms
walkWaitOFF2
00 100 100
200ms
walkWaitON2
01 100 100
300ms
afterWalk
01 00 100
2sec
waitWalkW
01 100 010
1s
goW
01 100 001
2s
waitW
01 100 010
1s
stopW
01 100 100
2s
010
011
000
001
01X
XXX
XXX
XXX