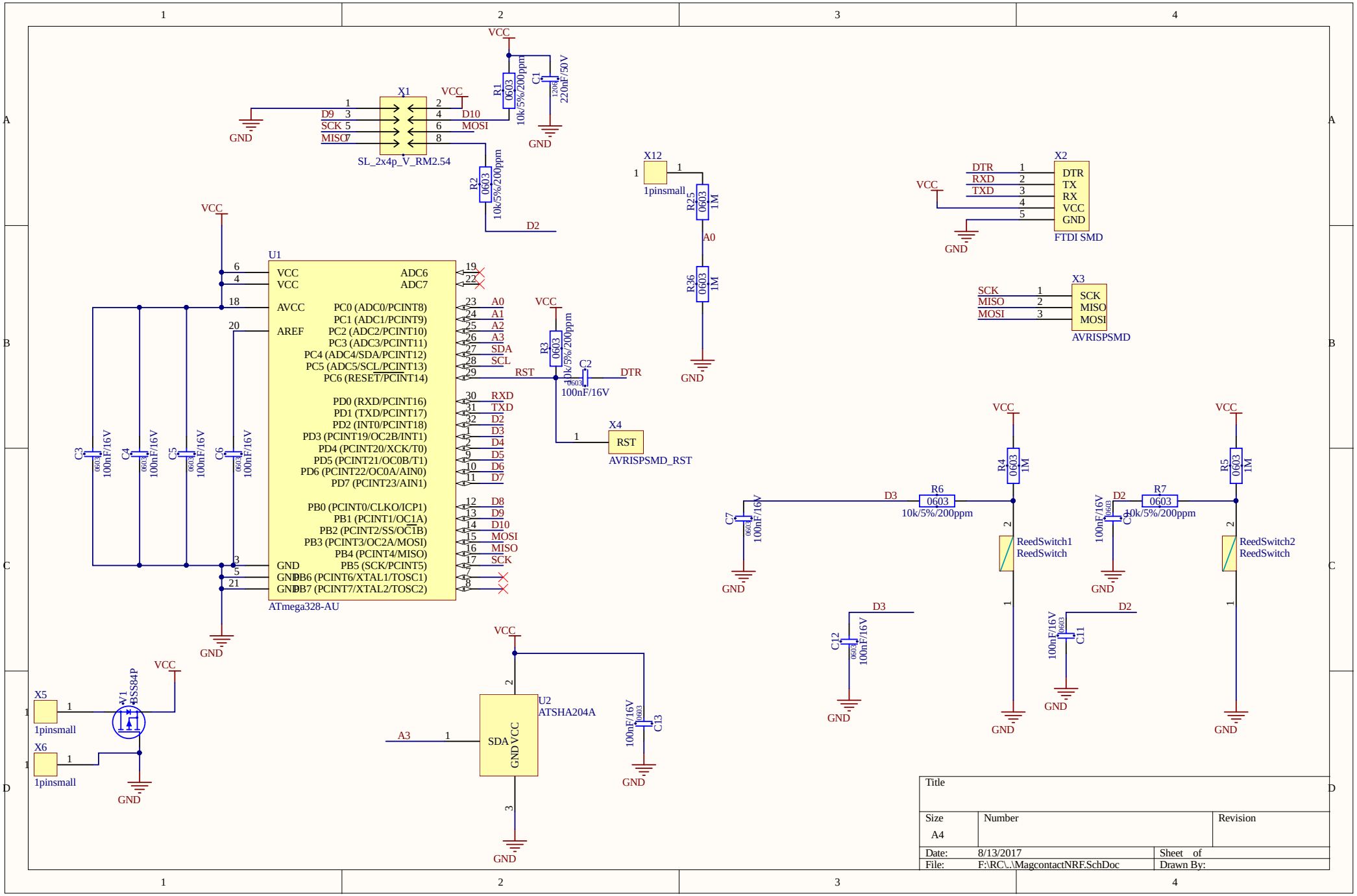
VCC
R1 0603 10k/5%/200ppm
C1 1206 220nF/50V
GND
X1
D9
SCK
MISO
D10
MOSI
SL_2x4p_V_RM2.54
R2 0603 10k/5%/200ppm
D2
X12
1pinsmall
R25 0603 1M
A0
R36 0603 1M
X2
DTR
RXD
TXD
TX
RX
FTDI SMD
X3
SCK
MISO
MOSI
AVRISPSMD
U1
ATmega328-AU
VCC
AVCC
AREF
ADC6
ADC7
PC0 (ADC0/PCINT8)
PC1 (ADC1/PCINT9)
PC2 (ADC2/PCINT10)
PC3 (ADC3/PCINT11)
PC4 (ADC4/SDA/PCINT12)
PC5 (ADC5/SCL/PCINT13)
PC6 (RESET/PCINT14)
PD0 (RXD/PCINT16)
PD1 (TXD/PCINT17)
PD2 (INT0/PCINT18)
PD3 (PCINT19/OC2B/INT1)
PD4 (PCINT20/XCK/T0)
PD5 (PCINT21/OC0B/T1)
PD6 (PCINT22/OC0A/AIN0)
PD7 (PCINT23/AIN1)
PB0 (PCINT0/CLKO/ICP1)
PB1 (PCINT1/OC1A)
PB2 (PCINT2/SS/OC1B)
PB3 (PCINT3/OC2A/MOSI)
PB4 (PCINT4/MISO)
PB5 (SCK/PCINT5)
PB6 (PCINT6/XTAL1/TOSC1)
PB7 (PCINT7/XTAL2/TOSC2)
GND
RST
R3 0603 10k/5%/200ppm
C2 0603 100nF/16V
X4
RST
AVRISPSMD_RST
C3 0603 100nF/16V
C4 0603 100nF/16V
C5 0603 100nF/16V
C6 0603 100nF/16V
R4 0603 1M
R5 0603 1M
R6 0603 10k/5%/200ppm
R7 0603 10k/5%/200ppm
C7 0603 100nF/16V
C9 0603 100nF/16V
C11 0603 100nF/16V
C12 0603 100nF/16V
ReedSwitch1
ReedSwitch
ReedSwitch2
ReedSwitch
X5
1pinsmall
X6
1pinsmall
V1
3SS84P
U2
ATSHA204A
SDA
GND
VCC
A3
C13 0603 100nF/16V
Title
Size
A4
Number
Revision
Date: 8/13/2017
Sheet of
File: F:\RC\..\MagcontactNRF.SchDoc
Drawn By: