MOBILE PHONE CHARGER PROTOTYPE

(ADITYA SINGH-2K22/EC/20 & ADITYA GUPTA-2K22/EC/17)

(Email:adityagupta_ec22a15_70@dtu.ac.in ,

adityasingh_ec22a15_73@dtu.ac.in)

Department of Electronics and Communication, Delhi Technological University

Bawana road, Shabad Daulatpur, Delhi-110042 , India

Dr Rajeshwari pandey, professor, Delhi Technological university

ABSTRACT

Mobile battery charger circuit is a device that can automatically recharge a mobile phone's battery when the power in it gets low. Nowadays mobile phones have become an integral part of everyone's life and hence require frequent charging of battery owing to longer duration usage.

Battery chargers come as simple, trickle, timer based, intelligent, universal battery charger-analyzers, fast, pulse, inductive, USB based, solar chargers and motion powered chargers. These battery chargers also vary depending on the applications like mobile phone charger, battery charger for vehicles, electric vehicle batteries chargers and charge stations.

So basically we are going to build a 5v regulated DC supply from 220 AC. This DC supply can be used to charge mobiles as well as the power source for digital circuits, breadboard circuits, ICs, microcontrollers etc.

You can also build 6V DC, 9V, 12V, 15V etc by using proper transformer, capacitor and voltage regulator. The basic concept remains the same, you just need to arrange a heat sink for higher voltage and current.

This circuit mainly consists a step down Transformer, a Full wave bridge rectifier and a 5V voltage regulator IC (7805). We can divide this circuit into four parts: (1) Step down AC voltage: As we are converting 220V AC into a 5V DC, first we need a step-down transformer to reduce such high voltage. Here we have used 9-0-9 1A step-down transformer, which convert 220V AC to 9V AC. In transformer there are primary and secondary coils

which step up or step down the voltage according to the no of turn in the coils.

(2) Rectification : Rectification is the process of removing the negative part of the Alternate Current (AC), hence producing the partial DC. This can be achieved by using 4 diodes. Diodes only allow current to flow in one direction.

(3) Filtration: The output after the Rectification is not a proper DC, it is oscillation output and has a very high ripple factor. We don't need that pulsating output, for this we use Capacitor. Capacitor charge till the waveform goes to its peak and discharge into Load circuit when waveform goes low. So when output is going low, capacitor maintains the proper voltage supply into the Load circuit, hence creating the DC.

(4) Voltage Regulation.:A voltage regulator IC 7805 is used to provide a regulated 5v DC. Input voltage should be 2volts more than the rated output voltage for proper working of IC, means at least 7v is needed, although it can operate in input voltage range of 7-20V. Voltage regulators have all the circuitry inside it to provide a proper regulated DC. Capacitor of 0.01uF should be connected to the output of the 7805 to eliminate the noise, produced by transient changes in voltage.

TABLE OF CONTENT:-

- Introduction
- Equipment required
- Flowchart
- Circuit diagram
- Implementation
- Result
- Future modifications
- Bibliography

INTRODUCTION

The aim of our project is to build a simple prototype of mobile phone charger . the project is extremely simple as it include the basic concepts of electronics .

The aim of the project is to learn the concepts of rectification , filtration , stepdown ac and using the concepts to build something useful in day to day life .

EQUIPMENT REQUIRED:-

- Bread board

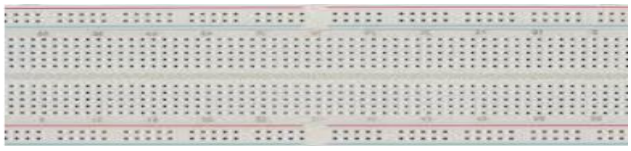

- 4 p-n junction diode

- Capacitor (1000uf)

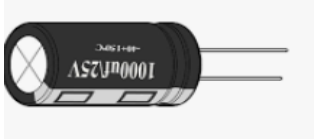

- Transformer (9-0-9)

- Connecting wires

- 7805 IC

FLOW CHART:-

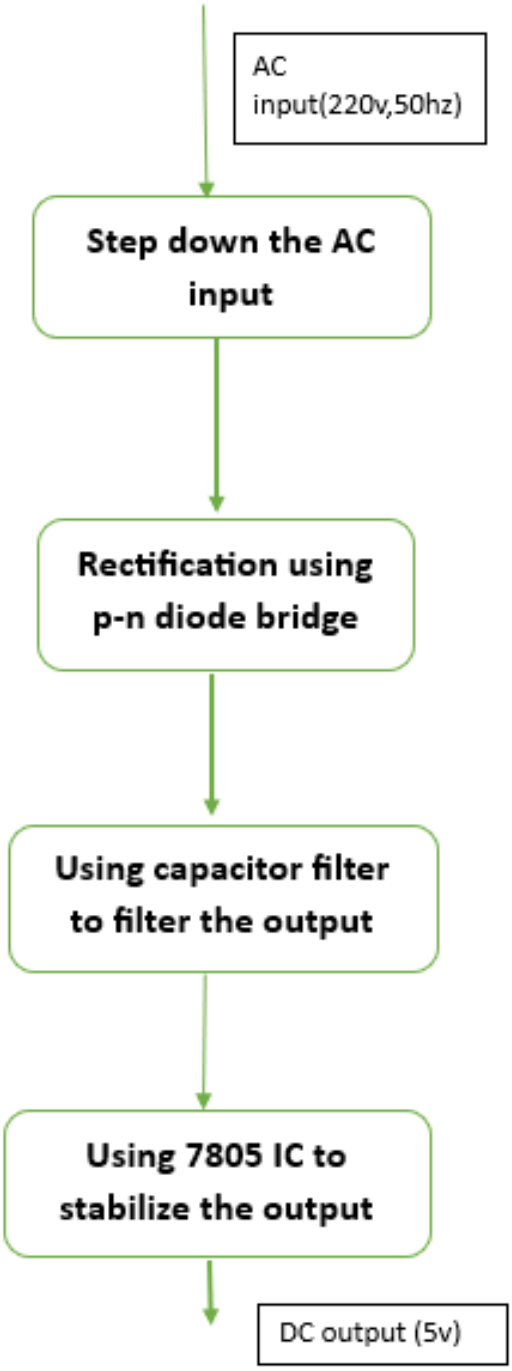
AC input(220v,50hz)
Step down the AC input
Rectification using p-n diode bridge
Using capacitor filter to filter the output
Using 7805 IC to stabilize the output
DC output (5v)

CIRCUIT DIAGRAM:-

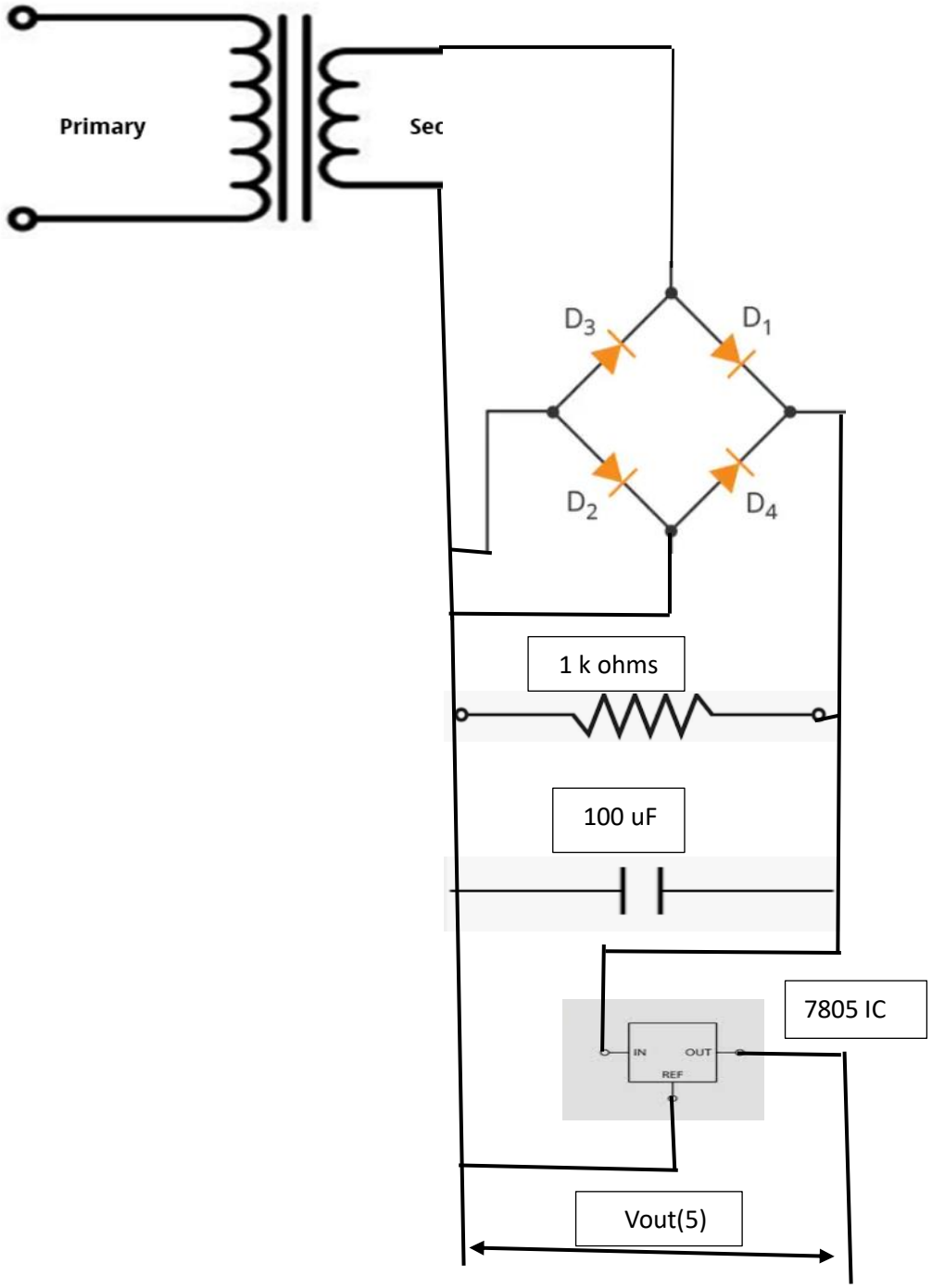

IMPLEMENTATION:

STEPDOWN AC VOLTAGE:

As we are converting 220V AC into a 5V DC, first we need a step-down transformer to reduce such high voltage. Here we have used 9-0-9 1A step-down transformer, which convert 220V AC to 9V AC. In transformer there are primary and secondary coils which step up or step down the voltage according to the no of turn in the coils.

Selection of proper transformer is very important. Current rating depends upon the Current requirement of **Load circuit** (circuit which will use the generate DC). The voltage rating should be more than the required voltage. Means if we need 5V DC, transformer should at least have a rating of 7V, because voltage regulator IC 7805 at least need 2V more i.e. 7V to provide a 5V voltage.

RECTIFICATION :

When an AC signal is applied across the bridge rectifier, terminal A becomes positive during the positive half cycle while terminal B becomes negative. This results in diodes D_1 and D_3 becoming forward biased while D_2 and D_4 becoming reverse biased.

During the negative half-cycle, terminal B becomes positive while terminal A becomes negative. This causes diodes D_2 and D_4 to become forward biased and diode D_1 and D_3 to be reverse biased.

we notice that the current flow across load resistor R_L is the same during the positive and negative half-cycles. The output DC signal polarity may be either completely positive or

negative. In our case, it is completely positive. If the diodes' direction is reversed, we get a complete negative DC voltage.

Thus, a bridge rectifier allows electric current during both positive and negative half cycles of the input AC signal.

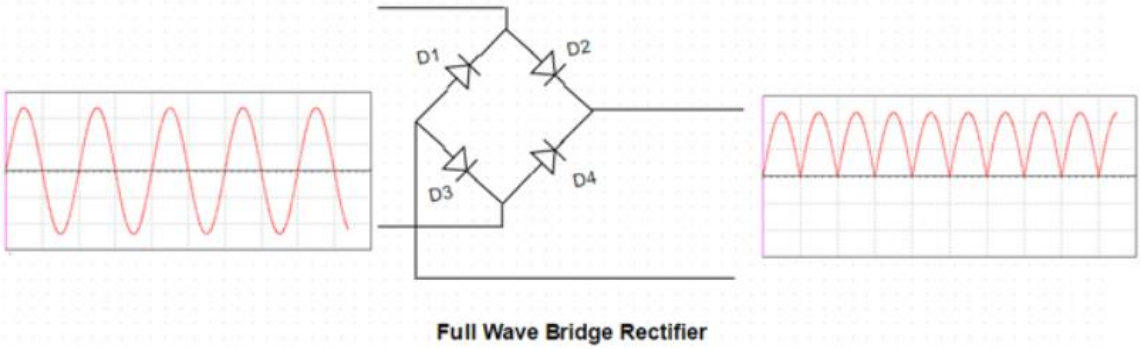

FILTERATION :

The output after the Rectification is not a proper DC, it is oscillation output and has a very high ripple factor. We don't need that pulsating output, for this we use Capacitor. Capacitor charge till the waveform goes to its peak and discharge into Load circuit when waveform goes low. So when output is going low, capacitor maintains the proper voltage supply into the Load circuit, hence creating the DC. Now how the value of this filter capacitor should be calculated. Here is the formulae:

C = I * t / V

C= capacitance to be calculated

I= Max output current (let's say 500mA)

t= 10ms,

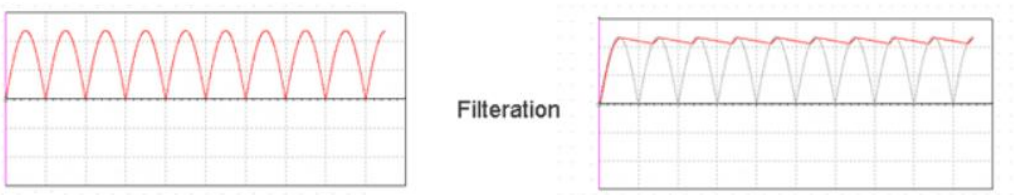

VOLTAGE REGULATION:

A voltage regulator IC 7805 is used to provide a regulated 5v DC. Input voltage should be 2volts more than the rated output voltage for proper working of IC, means at least 7v is needed, although it can operate in input voltage range of 7-20V. Voltage regulators have all the circuitry inside it to provide a proper regulated DC. Capacitor of 0.01uF should be connected to the output of the 7805 to eliminate the noise, produced by transient changes in voltage.

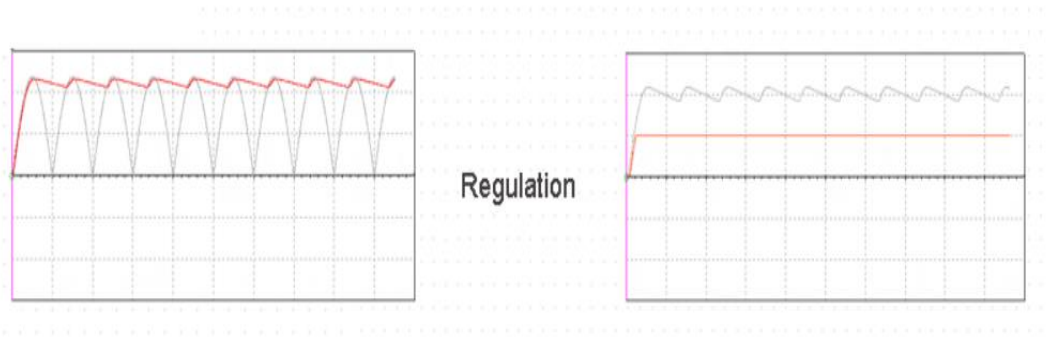

RESULT:-

The circuit provide a 5volt,1amphere constant output , that can be used to charge a mobile phone or any other device .

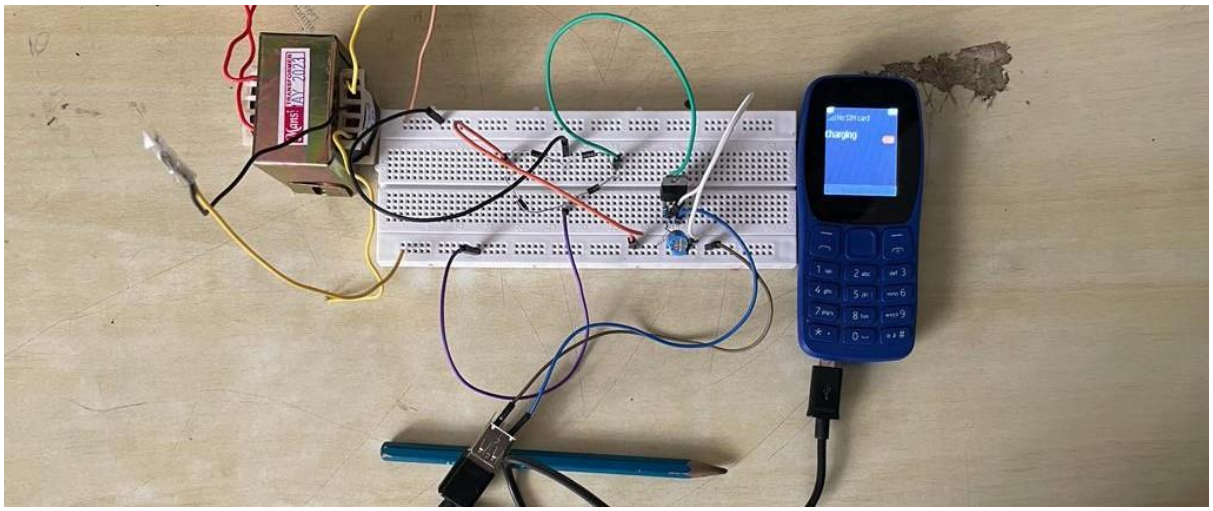

FUTURE MODIFICATION:-

Mobile phone is directly connected to the circuit , while in modern chargers outo-couplers are used due to which the device/mobile phone is not connected directly to circuit . In any case if any equipment stopped working and excessive current will start flowing in the circuit , the device will be damaged .for future modification we can add outo-coupler to the circuit .To avoid the device from getting damaged.

BIBLIOGRAPHY:-

- https://circuitdigest.com
- Analog electronics lab manual