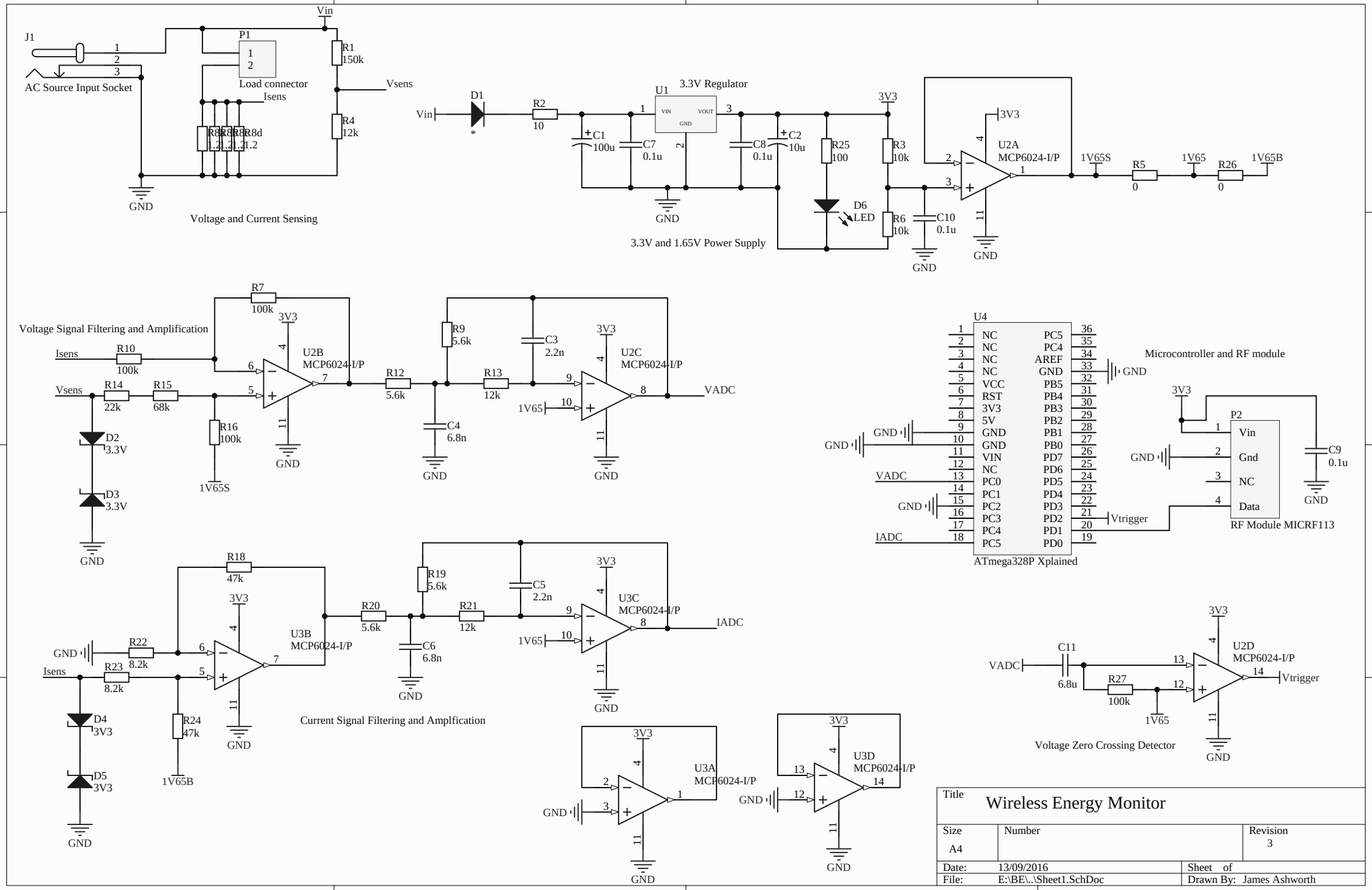
Voltage and Current Sensing
AC Source Input Socket
Load connector
3.3V Regulator
3.3V and 1.65V Power Supply
Voltage Signal Filtering and Amplification
Microcontroller and RF module
ATmega328P Xplained
RF Module MICRF113
Current Signal Filtering and Amplfication
Voltage Zero Crossing Detector
Wireless Energy Monitor
Size A4
Number
Revision 3
Date: 13/09/2016
Sheet of
File: E:\BE\..\Sheet1.SchDoc
Drawn By: James Ashworth