THADOMAL SHAHANI ENGINEERING COLLEGE

DEPARTMENT OF

Artificial Intelligence & Data Science

Name of Student : Adit Sanjay Mokashi

Class : SE

Division : S2

Roll Number : 2511136

Batch : S23

Subject : Fundamentals of Telecommunication Systems

Experiment Number : 2

Experiment Title : Overview and Demonstration of Mobile Network Component

Date of Submission : 02/04/2026

Experiment No. 02

Title: Overview and Demonstration of Mobile Network Components.

Aim:

To study and understand the architecture, major components, and basic working of a mobile communication network using free online demonstrations, animations, and educational videos.

Theory

A mobile communication system enables wireless voice and data communication between users over a wide geographical area. Communication between the mobile handset and the network is established using radio waves, while the core network performs switching, routing, authentication, and mobility management.

A large service area is divided into small regions called cells, each served by a Base Transceiver Station (BTS). This cellular architecture allows frequency reuse, efficient spectrum utilization, and uninterrupted service to moving users.

A basic mobile network consists of three major subsystems:

- Mobile Station (MS) – user equipment
- Radio Access Network (RAN) – BTS and controllers
- Core Network (CN) – switching and subscriber databases

Block Diagram

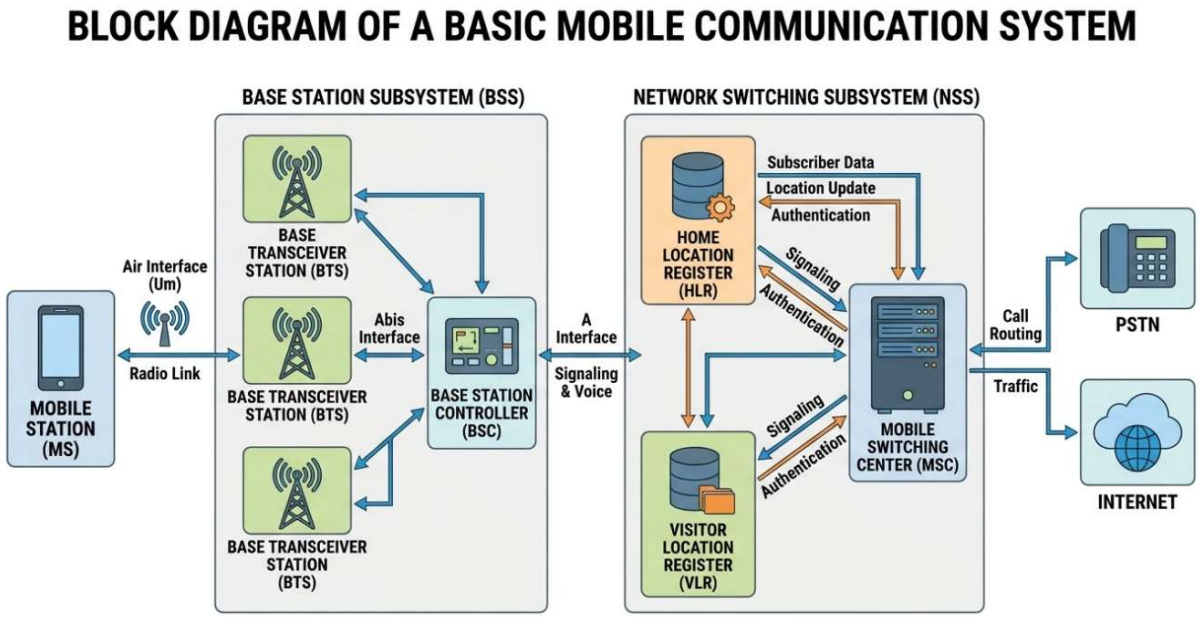

Task 1: Identification and study of Mobile Network Components

1. BTS (Base Transceiver Station)

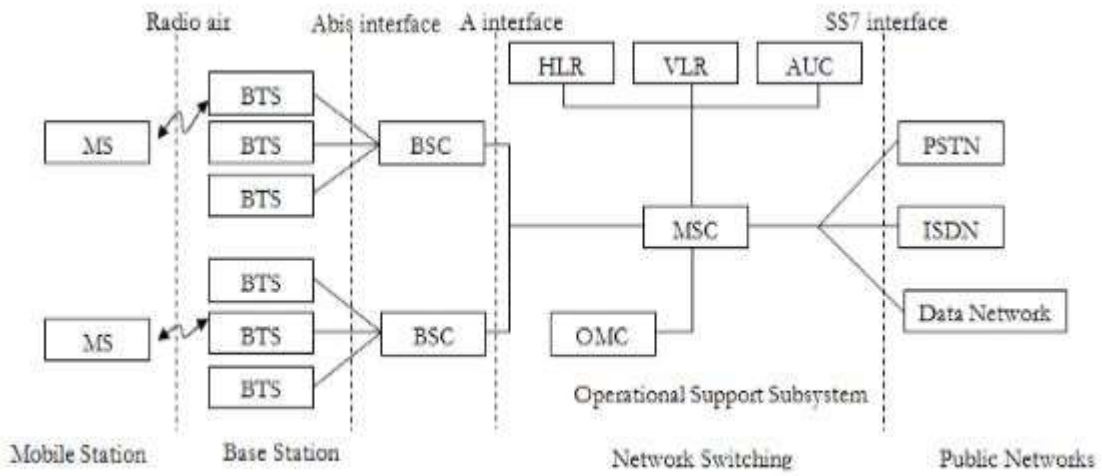

Fig: GSM Architecture

The **Base Transceiver Station (BTS)** is the component responsible for direct communication with mobile devices over radio waves. It includes antennas, transmitters, and receivers that enable wireless signal transmission within a specific geographic cell area. The BTS converts digital signals from the network into radio frequency signals that can be received by mobile phones, and vice versa. It also handles basic functions such as signal modulation, channel coding, and encryption support. The performance of the BTS directly affects signal strength, coverage area, and call quality. It is essential for providing wireless connectivity between users and the cellular network infrastructure.

2. BSC (Base Station Controller)

The **Base Station Controller (BSC)** manages and controls multiple BTS units within a specific region. It is responsible for allocating radio channels, controlling handovers between BTS cells, and managing network resources efficiently. The BSC ensures that mobile devices maintain continuous connectivity while moving from one cell to another. It also performs traffic concentration, reducing the load on higher-level network components. By coordinating BTS operations, the BSC improves network efficiency, reduces interference, and enhances overall communication reliability.

3. MSC (Mobile Switching Center)

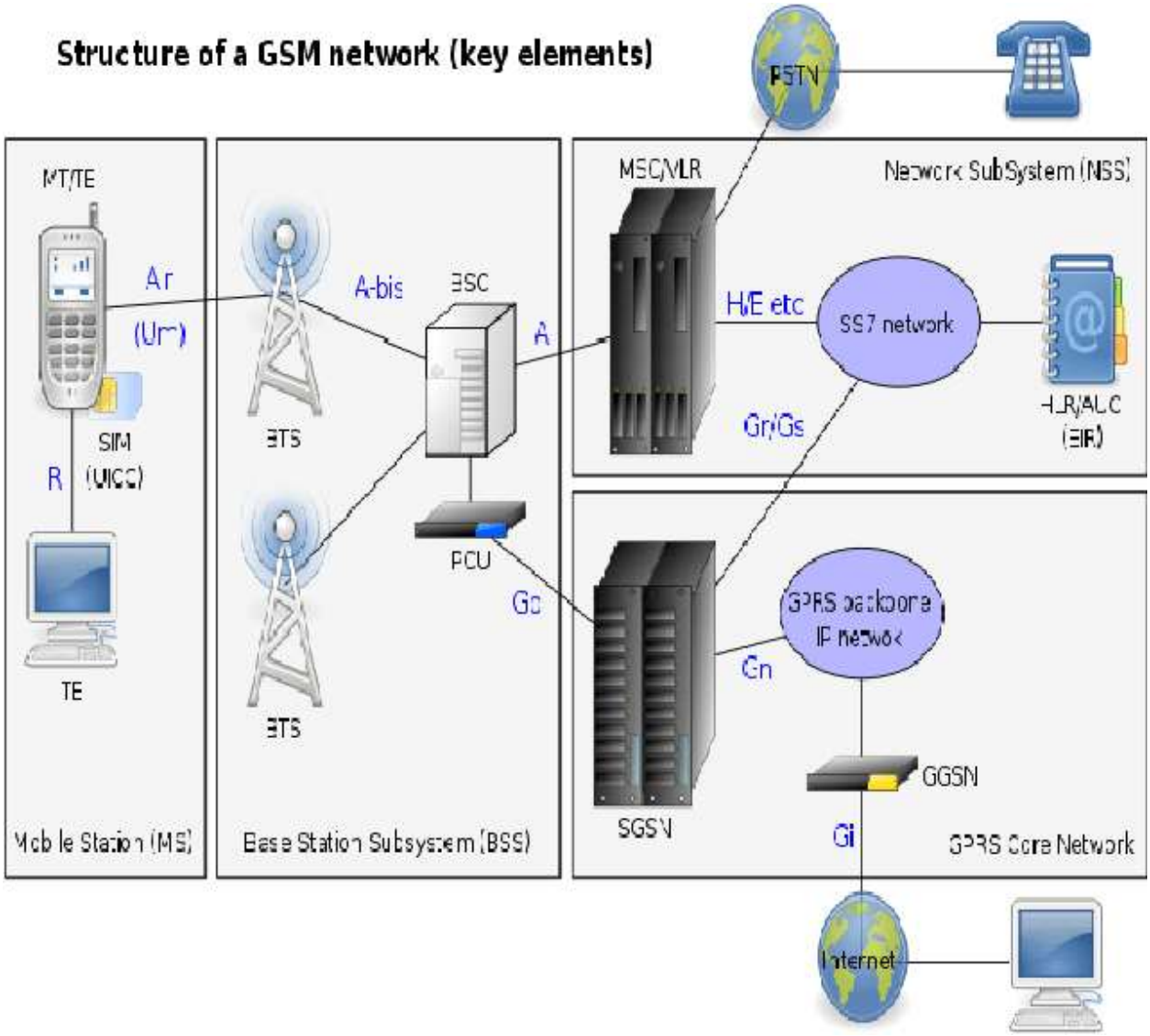

The **Mobile Switching Center (MSC)** is the central component of the GSM network that performs call routing, switching, and mobility management. It connects multiple BSCs and interfaces with other networks such as PSTN and internet services. The MSC is responsible for call setup, call termination, billing information generation, and SMS routing. It also ensures that calls are correctly connected between mobile users or between mobile and landline networks. The MSC plays a critical role in maintaining seamless communication across wide geographic regions.

4. HLR (Home Location Register)

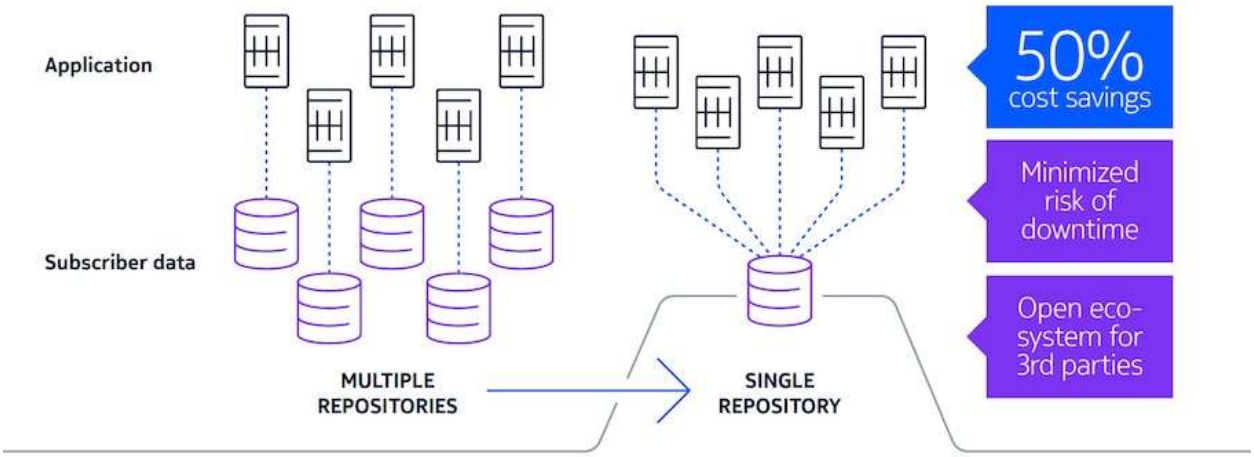

The **Home Location Register (HLR)** is a centralized database that stores permanent subscriber information such as phone number, service permissions, and authentication details. It maintains records of user profiles, including subscribed services like call forwarding or roaming capabilities. When a user attempts to connect to the network, the HLR provides necessary authentication and routing information. It ensures that only authorized users can access network services. The HLR is essential for user identity management and service customization in mobile communication systems.

5. VLR (Visitor Location Register)

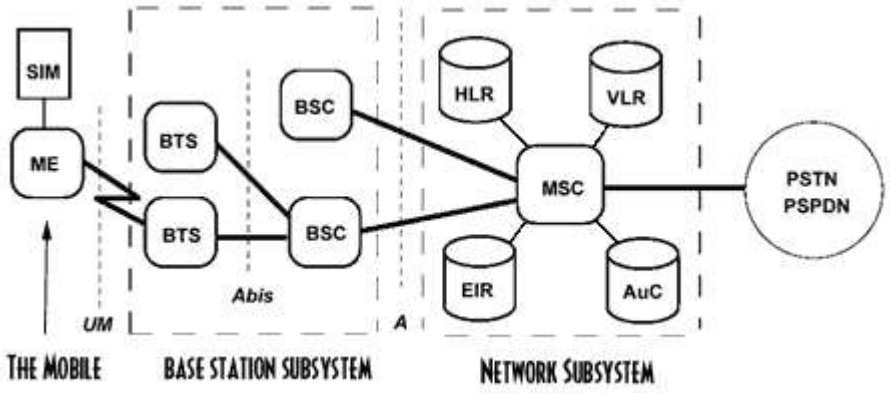

The **Visitor Location Register (VLR)** is a temporary database that stores information about subscribers currently present in a particular MSC region. It works closely with the HLR to obtain subscriber details when a user enters a new location area. The VLR helps reduce the need to repeatedly query the HLR, improving network efficiency and reducing response time. It stores temporary data such as current location area, service permissions, and authentication status. The VLR ensures seamless roaming and uninterrupted service when users move between different cellular regions.

Task 2: Conceptual Working of a Mobile Call

1. Mobile Power ON and Network Registration

When the mobile station (MS) is powered on, it searches for available GSM networks by scanning nearby BTS signals. The SIM card provides the subscriber identity (IMSI), which is verified by the network using the HLR and VLR databases. The network authenticates the user and registers the device in the current location area. This process allows the mobile device to access network services such as calling and messaging.

2. Call Initiation by Mobile User

When a user dials a number and presses the call button, the mobile station sends a call request through the nearest BTS. The dialed number is encoded into signaling information

and transmitted over the control channel. The network checks subscriber permissions and availability of resources before processing the call request. This step begins the process of establishing a communication path.

3. Radio Link Establishment between MS and BTS

A dedicated radio channel is assigned between the mobile station and the BTS to enable communication. The BTS and MS synchronize transmission parameters such as frequency and time slot allocation. Signal strength, interference, and channel quality are continuously monitored to maintain stable communication. This radio link forms the wireless portion of the call connection.

4. Call Routing through BSC and MSC

The BTS forwards the call request to the BSC, which manages radio resources and forwards the request to the MSC. The MSC determines the destination of the call and establishes a switching path to the receiving network or mobile user. Databases such as HLR and VLR assist in locating the destination subscriber. The MSC ensures proper routing and call setup through the core network.

5. Handover between Cells (if the user moves)

If the user moves to another cell during the call, the signal strength from the current BTS may decrease. The BSC or MSC automatically transfers the call to a neighboring BTS with better signal quality. This process, called handover, ensures uninterrupted communication without disconnecting the call. Handover maintains call continuity while the user is in motion.

6. Call Termination

When either user presses the end call button, the mobile station sends a disconnect signal to the network. The MSC releases the allocated communication channels and frees network resources. The BTS stops transmitting the dedicated radio signal associated with the call. The network updates the subscriber status and returns the system to idle mode, ready for future communication.

Conclusion

From the virtual study of GSM architecture, we understood how a mobile network converts human voice into electrical and radio signals for wireless communication. When a user speaks, the mobile device converts sound waves into digital electrical signals, which are transmitted through radio waves to the nearest BTS. These signals are then processed and routed through the BSC and MSC, while databases such as HLR and VLR help identify and locate the destination user. The cellular network ensures continuous connectivity through mechanisms like handover when the user moves between cells. At the receiver's end, the signals are converted back into sound waves, accurately reproducing the original voice. This experiment demonstrated how multiple interconnected components work together to enable seamless and reliable mobile communication over large geographic areas.