Roll No :		**Name :**	
Experiment No :	**8**		
Title :	Program to implement OFDM and evaluate frame error rate against SNR		
Date of Performance :			
Date of Checking :			
Grade :		**Sign of Staff**	

EXPERIMENT NO. 8
SIMULATION OF OFDM

AIM:- Program to implement OFDM and evaluate frame error rate against SNR.

EQUIPMENT:- PC with MATLAB/ Octave, PC and Printer

OBJECTIVE OF EXPERIMENT:- Simulate OFDM and evaluate frame error rate against SNR.

THEORY:-

Orthogonal Frequency-Division Multiplexing (OFDM) forms the basis for 4G, i.e., Fourth Generation wireless communication systems. OFDM is used in 4G wireless cellular standards such as Long-Term Evolution (LTE) and WiMAX (Worldwide Interoperability for Microwave Access). OFDM is a key broadband wireless technology which supports data rates in excess of 100 Mbps. Similarly, the wireless local area (LAN) standards such as 802.11 a/g/n are based on OFDM.

An OFDM system is defined by IFFT/FFT length – N, the underlying modulation technique (BPSK/QPSK/QAM), supported data rate, etc. The FFT/IFFT length N defines the number of total subcarriers present in the OFDM system.

IEEE 802.11 standard [IEEE80211] specifies the following parameters for its OFDM physical layer. FFT/IFFT size = 64 (implies 64 subcarriers in total = used + unused = NFFT) Number of data subcarriers = 48 (Nd) Number of pilot subcarriers = 4 (Np) Derived parameters from the above specification are: Number of total USED subcarriers = 52 (Nu = Nd+ Np) Number of total UNUSED subcarriers = 12 (Nun = NFFT – Nu). According to the spec, these 52 used subcarriers are distributed in the following way. The 52 used subcarriers are named as 1, 2, 3… 26 and -1, -2, -3… -26. The used subcarriers 1 to 26 are mapped to 1 to 26 of IFFT inputs and the subcarriers -1,-2, ..., -26 are mapped to the IFFT inputs 38 to 63. The remaining IFFT inputs 27 to 37 and the input 0 (dc input) are set to “0”. In this manner the 12 null subcarriers are mapped to IFFT inputs. The OFDM transmitter & receiver system which will be simulated in this experiment is as shown in fig 7.1

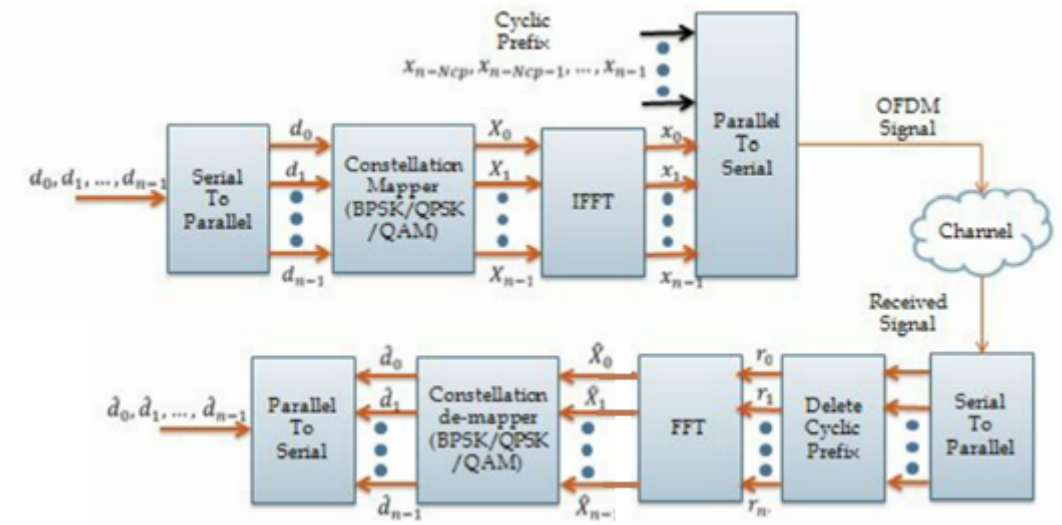

OFDM Transmitter & Receiver System

Arrangement of subcarriers: The IEEE 802.11 specification specifies how to arrange the given subcarriers. The 52 used subcarriers (data + pilot) are assigned numbers from -26,-25, …,-2,-1 and 1,2,…,25,26. The following figure illustrates the scheme of assigning these subcarriers to the IFFT inputs.

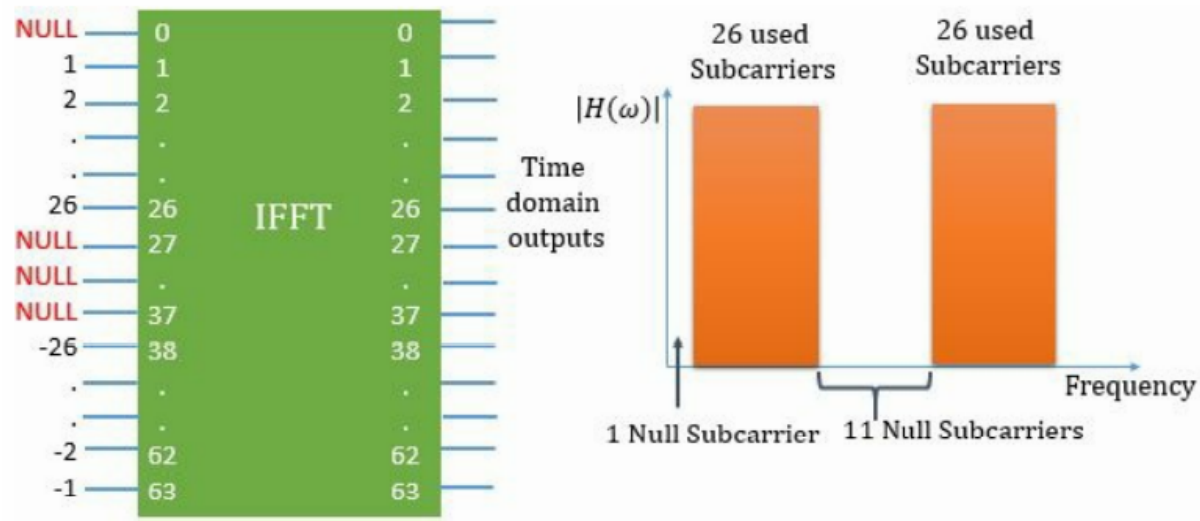

Arrangement of subcarriers

For simulation consider IEEE 802.11 standard [IEEE80211] which specifies the following parameters for its OFDM physical layer.

- FFT/IFFT size = 64 (implies 64 subcarriers in total = used + unused = NFFT)
- Number of data subcarriers = 48 (Nd)
- Number of pilot subcarriers = 4 (Np)
- Derived parameters from the above specification are:
- Number of total USED subcarriers = 52 (Nu = Nd+ Np)
- Number of total UNUSED subcarriers = 12 (Nun = NFFT – Nu).

CODE:-

RESULTS:-

CONCLUSION:-