	R V College of Engineering **Department of Computer Science and Engineering** **CIE - I : Question Paper**		
Course : (Code)	**Computer Networks(21CS45)**	**Semester :**	**IV**
Date : /06/2023	**Duration :** 90 minutes	**Staff :**	**SCN/MM/PH/Sushmita/Narasimha swamy**
Name :	**USN** :	**Section :**	**A/B/C/ISE/AIML**

Sl.no		Marks	*L1-L6	*CO
1a	Network layer provides services to transport layer. In this case what are the goals that should be considered while designing?	03	1	3
1b	With a neat flow diagram, explain the process of data transmission in CSMA/CA.	07	2	2
2a	Match the following functions to one or more layers of the TCP/IP protocol suite. i. transforming bits to electromagnetic signals ii. route determination iii. end to end error detection and correction iv. providing services for the end user v. handling flow control	05	2	1,2
2b	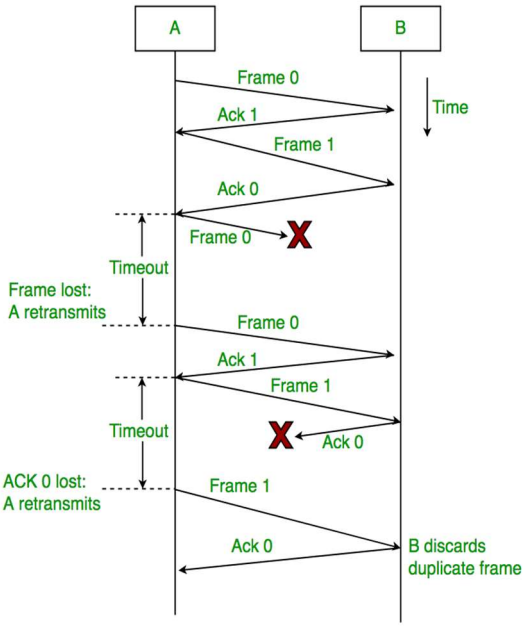 Observe the figure above and identify the protocol whose working is represented in this diagram. Also explain the communication scenario of the diagram.	05	3	5
3.a	Differentiate between Circuit-Switched and Packet Switched Network?	05	2	1
3.b.	Implement bit/byte stuffing for following bit streams: i. 00 011111 110 011111 0100 011111 11111 10000111 ii. Unstuff the following frame payload in which E is the escape byte, F is the flag byte, and D is a data byte other than an escape or a flag character. EEDE FDDE FEED DD	05	3	3
4a	Design Routing tables for nodes 1,2, 3,4,5 for performing routing in the given datagram network across Host H1and Host H2.	05	3	1

	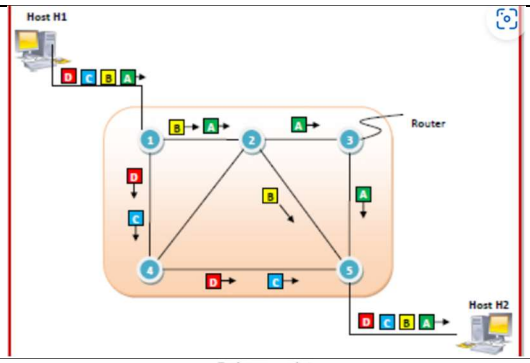			
4b	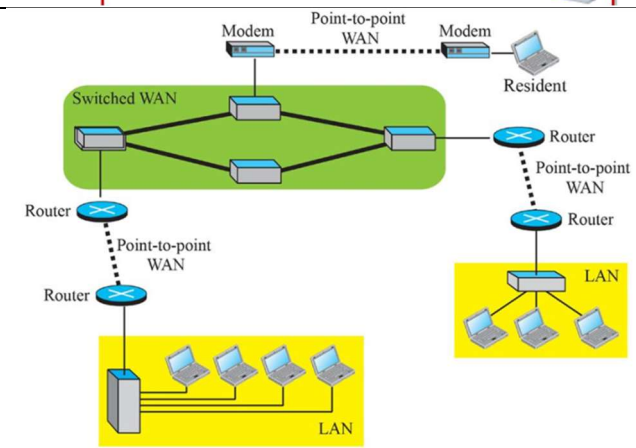 Examine the above diagram and explain all the components involved and their functions.	05	2	1
5a	Explain the PPP frame structure showing the fields of the frame.	06	2	3
5b	Identify the frame to which the given control fields belong and explain the same. i. 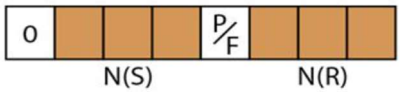 ii.	04	2	2

COURSE OUTCOMES:

CO1.	Apply the algorithms/techniques of routing and congestion control to solve problems related to Computer Networks.
CO2.	Analyse the services provided by various layers of TCP/IP model to build effective solutions
CO3.	Design sustainable networking solutions with societal and environmental concerns by engaging in lifelong learning for emerging technology.
CO4.	Exhibit network configuration, protocol usage and performance evaluation in networks.
CO5.	Demonstrate the solutions using various algorithms/protocols available to address networking issues using modern tools by exhibiting team work and effective communication.

	L1	L2	L3	L4	L5	L6	CO1	CO2	CO3	CO4	CO5
Marks	3	32	15	-	-	-	17	14	14	-	5

Scheme and Solution

Qno		Marks
1a	Network layer provides services to transport layer. In this case what are the goals that should be considered while designing? i. The services should be independent of the router technology ii. The transport layer should be shielded from the number, type and topology of the routers present. iii. The network addresses made available to the transport layer should use a uniform numbering plan, even across LANs and WANs.	3m
1b	With a neat flow diagram, explain the process of data transmission in CSMA/CA. 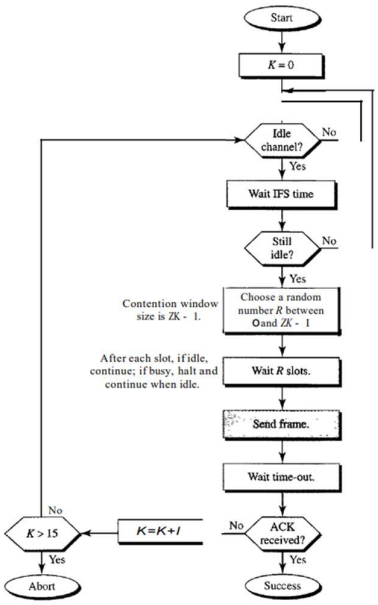 Diagram----------2m Explanation of Interframe Space, ContentionWindow, Acknowledgement- ----------5m	7M
2a	Match the following functions to one or more layers of the TCP/IP protocol suite. i. transforming bits to electromagnetic signals-physical layer ii. route determination—network layer iii. end to end error detection and correction-data link layer iv. providing services for the end user-application layer v. handling flow control-datalink layer & transport layer	05

2b (05)

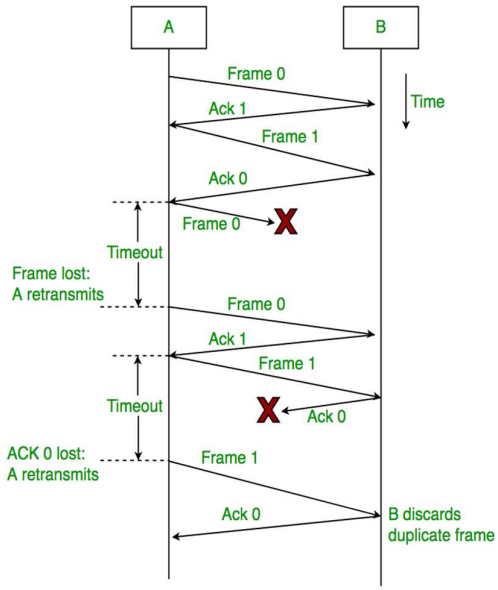

Observe the figure above and identify the protocol whose working is represented in this diagram. Also explain the communication scenario of the diagram.

Protocol is stop and wait protocol showing the adding of sequence number and acknowledgement number helping in handling duplicates.----------identification of protocol -----1m
Explanation ----------4m

3a (05)

Differentiate between Circuit-Switched and Packet Switched Network?

Circuit Switching	Packet Switching
Circuit switching requires a dedicated path before sending data from source to destination.	Packet switching does not require a dedicated path to send data from source to destination.
It reserves the entire bandwidth in advance.	It does not reserve bandwidth in advance
No store and forward transmission	It supports store and forward transmission
Each packet follows the same route	A packet can follow any route
Call setup is required	No call setup is required
Bandwidth wastage	No bandwidth wastage

3b (05)

Implement bit/byte stuffing for following bit streams:

i. 00 011111 110 011111 0100 011111 11111 10000111

Bit-stuff the following frame payload:

00011111110011111010001111111111110000111

Add a 0 after every 5 consecutive ones:

00 011111 110 011111 0100 011111 11111 10000111 =>

00 0111110 110 0111110 0100 0111110 111110 10000111 **=>----------3m**

ii. Unstuff the following frame payload in which E is the escape byte, F is the flag byte, and D is a data byte other than an escape or a flag character. EEDE FDDE FEED DD

Unstuff the following frame payload in which E is the escape byte, F is the flag byte, and D is a data byte other than an escape or a flag character.

EEDE FDDE FEED DD
EDFDDFEDDD----------
2m

4a Design Routing tables for nodes 1,2, 3,4,5 for performing routing in the given datagram network across Host H1and Host H2. 05

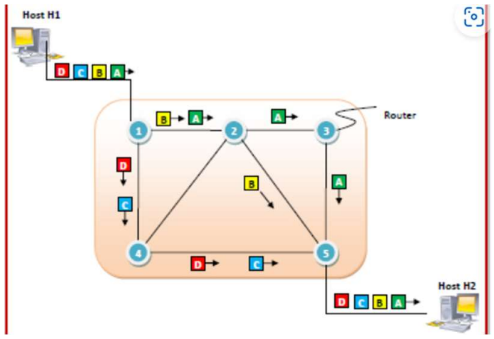

1's Routing Table

DEST	NEXT
1	-
2	2
3	2
4	4
5	2

2's Routing Table

DEST	NEXT
1	1
2	-
3	3
4	4
5	3

3's Routing Table

DEST	NEXT
1	2
2	2
3	-
4	5
5	5

4's Routing Table

DEST	NEXT
1	1
2	1
3	1
4	-
5	5

2's Routing Table

DEST	NEXT
1	1
2	-
3	3
4	4
5	5

1's Routing Table

DEST	NEXT
1	-
2	2
3	2
4	4
5	4

Each table carries 1m

4b 5

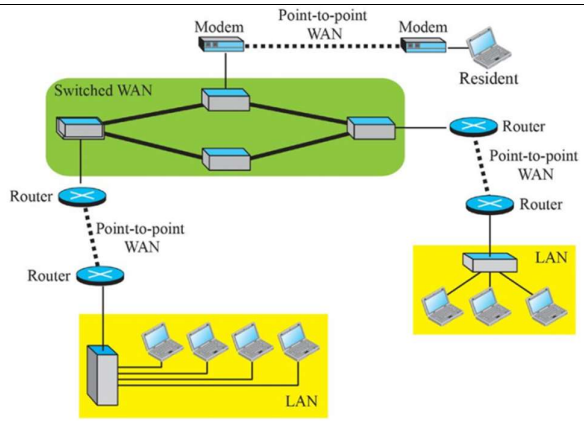

Examine the above diagram and explain all the components involved and their functions.
Explanation of following elements to be done:

i. Switch

	ii. Router iii. LAN iv. WAN v. MODEM ----------1m each	
5a	Explain the PPP frame structure showing the fields of the frame. 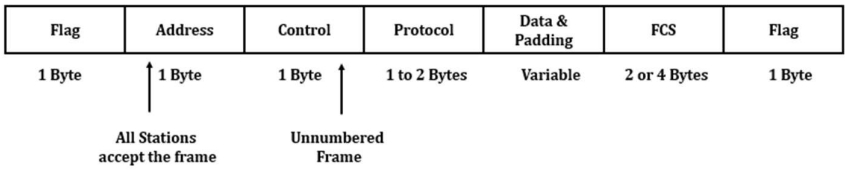 Frame format –2m Explanation of each field- 4m	06
5b	Identify the frame to which the given control fields belong and explain the same. i. 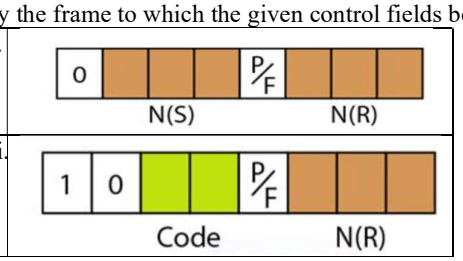 ii. i. I frame-----2m ii. S frame ------2m	04