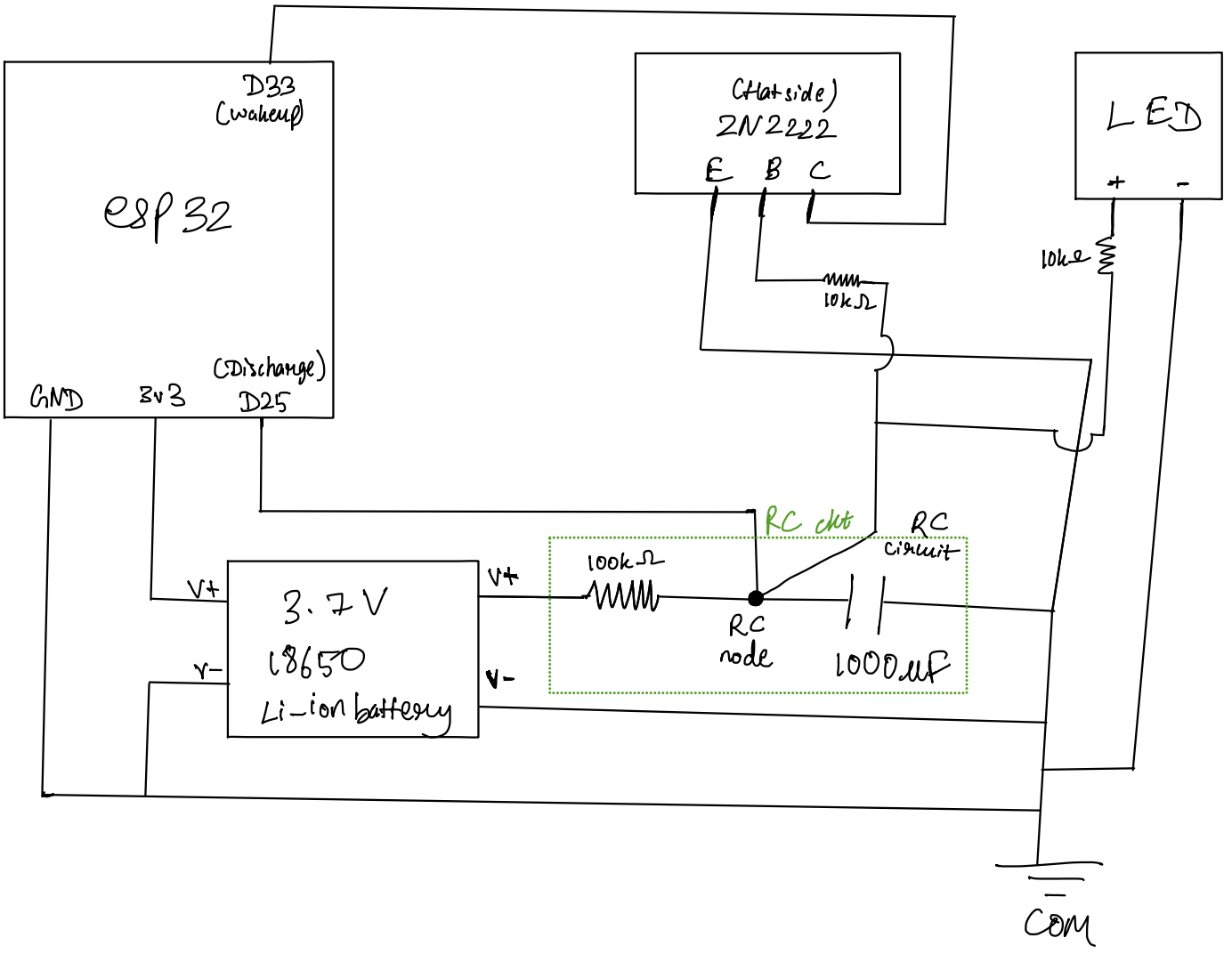
D33
(wakeup)
esp32
(Discharge)
GND
3v3
D25
(flat side)
2N2222
E B C
LED
+ -
10kΩ
10kΩ
RC ckt
RC
circuit
V+
V-
3.7V
18650
Li-ion battery
V+
V-
100kΩ
RC
node
1000uF
COM