BLOCK 1: Power Regulation (LM317)

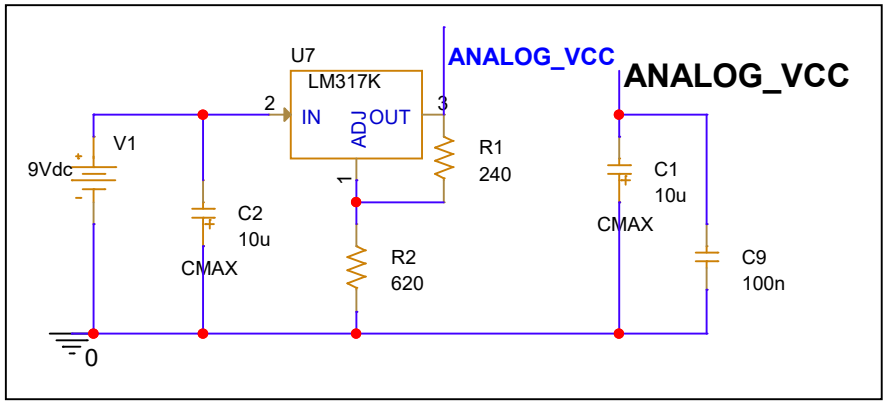

BLOCK 2: Current-Starved VCO

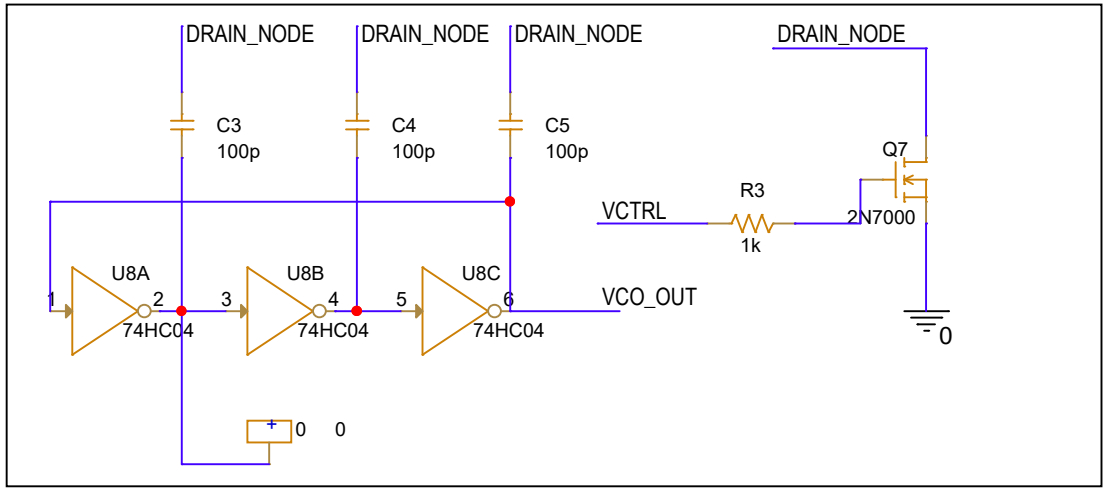

BLOCK 3 : PHASE DETECTOR

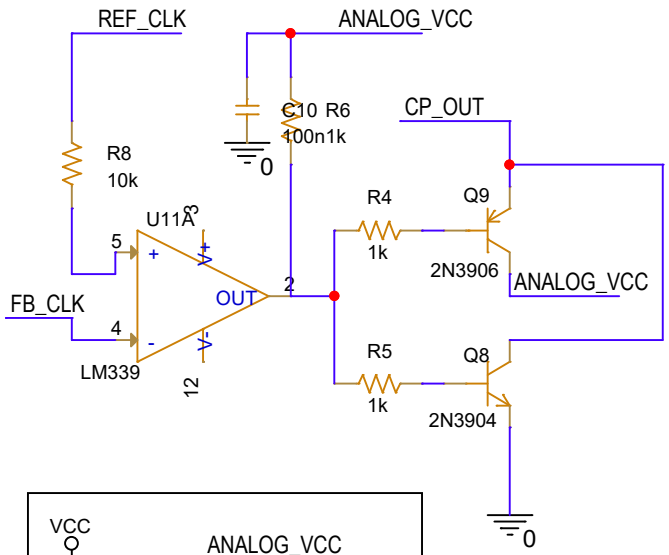

BLOCK 4: Loop Filter

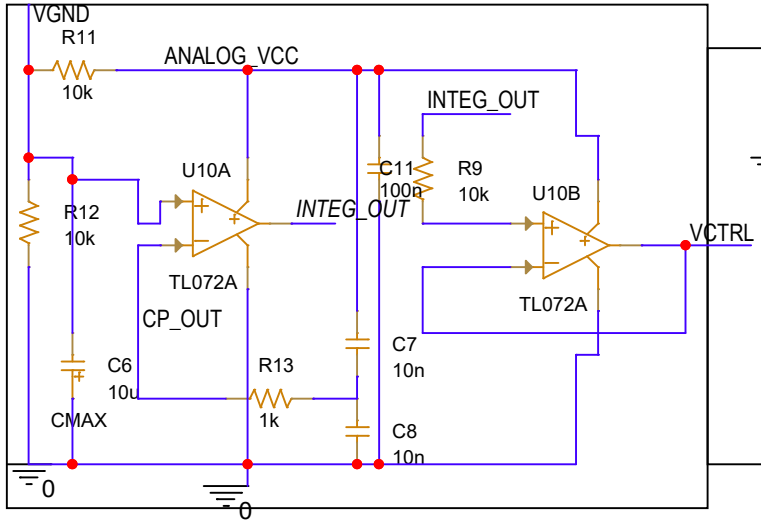

BLOCK5: Digital Frequency Divider (74HC163)

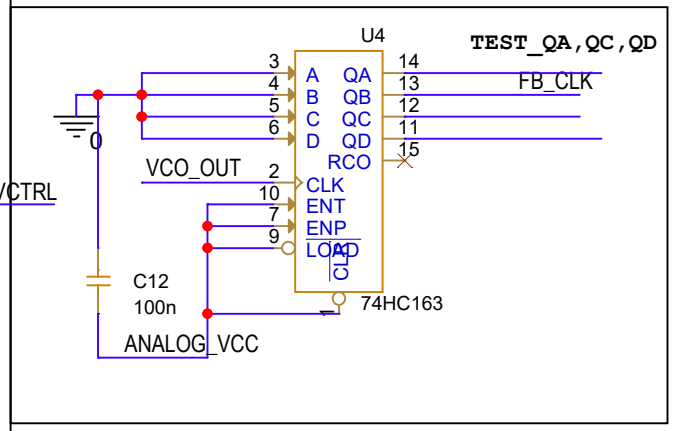

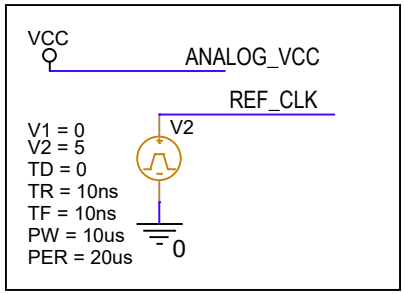

Discrete Mixed-Signal Phase-Locked Loop (PLL) 50kHz Frequency Synthesizer

ADITYA MITTAL
25BEE0060