Visit **www.brpaper.com** for downloading previous years question papers of
10th and 12th (PSEB and CBSE), IKPTU,MRSSTU, PSBTE, PANJAB UNIVERSITY,
PUNJABI UNIVERSITY, BFUHS, HPTU, HPSBTE , HARYANA DIPLOMA, MDU HARYANA

Roll No. | | | | | | | | | | | | | **Total No. of Pages : 03**

Total No. of Questions : 09

B.Tech. (Agriculture Engineering) (Sem.–1)

ENGINEERING MECHANICS

Subject Code : BTAG-106-22

M.Code : 92764

Date of Examination : 25-01-23

Time : 3 Hrs. **Max. Marks : 60**

INSTRUCTIONS TO CANDIDATES :

1. **SECTION-A is COMPULSORY consisting of TEN questions carrying TWO marks each.**
2. **SECTION - B & C. have FOUR questions each.**
3. **Attempt any FIVE questions from SECTION B & C carrying EIGHT marks each.**
4. **Select atleast TWO questions from SECTION - B & C.**

SECTION-A

1. Write short notes on :

a) State triangle law of forces.

b) State laws of friction.

c) Explain Vector quantities.

d) What are rigid bodies? Explain.

e) Define cone of friction.

f) Explain the principle of a linear momentum.

g) Define kinematics and dynamics.

h) Define Newton's 2nd law of motion.

i) Explain parallel axis theorem.

j) What do you mean by moment of a couple?

brpaper.com
brpaper.com

BR paper
exams preparatory

SECTION-B

2. Explain various force systems with neat sketches.

3. A body weighing 70kN rests in equilibrium on a rough plane whose slope is 300. The plane is raised to a slope of450. What is the force applied to the body parallel to the plane that will support the body on the plane?

4. Find the moment of inertia of the following figure about the given XX axes.

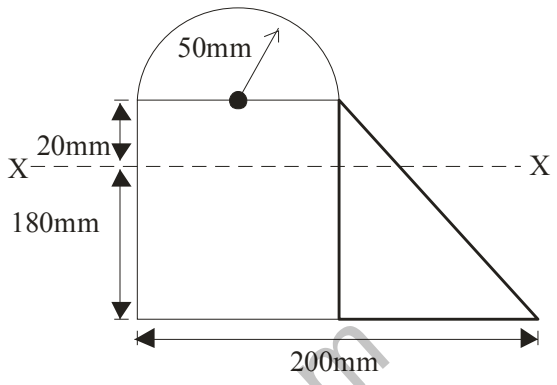

5. A hollow cast iron column whose outside diameter is 200 mm has a thickness of 20 mm. It is 4.5 m long and is fixed at both ends. Calculate the safe load by Rankine-Gordon formula using a factor of safety of 4. Take permissible compressive stress as 550 MN/m^2 and constant a = 1/1600.

SECTION-C

6. What do you understand by the term 'Couple'? Discuss the characteristics of a couple.

7. Two identical rollers, each of weight 100 N, are supported by an inclined plane and a vertical wall as shown in below Figure. Assuming smooth surfaces, find the reactions induced at the point of support A, B and C.

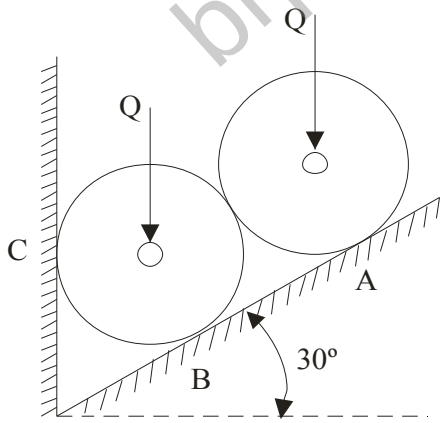

brpaper.com
brpaper.com

8. A truss is composed of members AB, BC, CD, and DA as shown in figure. A vertical load of 10 kN is applied at point D. Find the magnitude of force in the member BC.

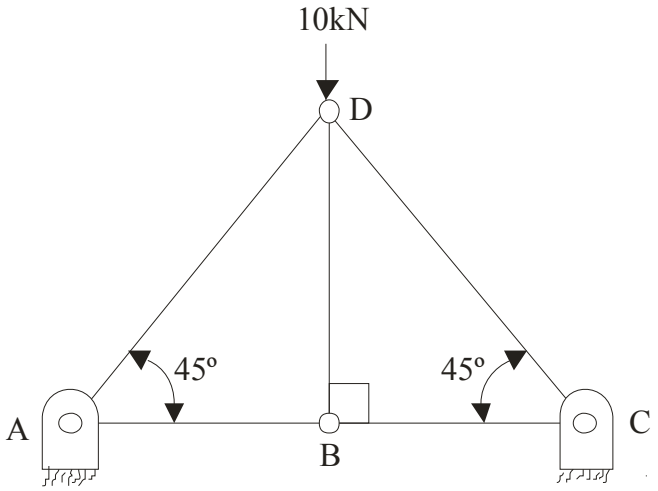

9. What is the significance of stress-strain curve? Describe a stress-strain curve for tensile material.

brpaper.com
brpaper.com

NOTE : Disclosure of Identity by writing Mobile No. or Marking of passing request on any paper of Answer Sheet will lead to UMC against the Student.