Visit **www.brpaper.com** for downloading previous years question papers of
10th and 12th (PSEB and CBSE), IKPTU,MRSSTU, PSBTE, PANJAB UNIVERSITY,
PUNJABI UNIVERSITY, BFUHS, HPTU, HPSBTE , HARYANA DIPLOMA, MDU HARYANA

Roll No. ☐☐☐☐☐☐☐☐☐☐☐☐ **Total No. of Pages : 03**

Total No. of Questions : 18

B.Tech. (CE) (2012 to 2017) (Sem.–5)

STRUCTURAL ANALYSIS–II

Subject Code : BTCE-503

M.Code : 70514

Time : 3 Hrs. **Max. Marks : 60**

INSTRUCTIONS TO CANDIDATES :

1. **SECTION-A is COMPULSORY consisting of TEN questions carrying TWO marks each.**
2. **SECTION-B contains FIVE questions carrying FIVE marks each and students have to attempt any FOUR questions.**
3. **SECTION-C contains THREE questions carrying TEN marks each and students have to attempt any TWO questions.**

SECTION-A

Answer briefly :

1. Differentiate between rigid jointed and pin jointed structures with the help of sketch.

2. What are the fixed end moments for beam having span 6m and subjected to u.d.l of 7.5 kN/m?

3. Differentiate between the static and kinematic indeterminacy with example.

4. State Muller-Breslau principle.

5. What is the relationship between bending moment, Shear force and load on the beam?

6. Sketch the elastic curve of a simply supported beam with equal overhang on both sides, having two point load P each at the free ends.

7. Explain various assumption made in portal method of analysis.

8. Define minimum strain energy theorem.

9. Write down displacement contribution equation.

10. What are forces developed in a prismatic member when a unit rotation is given to its one end and other end is fixed?

brpaper.com
brpaper.com

BR paper
exams preparatory

SECTION-B

11. A two-hinged circular arch has a span of 45m and rise of 8m. It is loaded with a point load of 55 kN at a distance of 17m from left support. Determine the reaction and draw bending moment diagram.

12. Analyse the beam shown in Fig. (1) by three moment theorem.

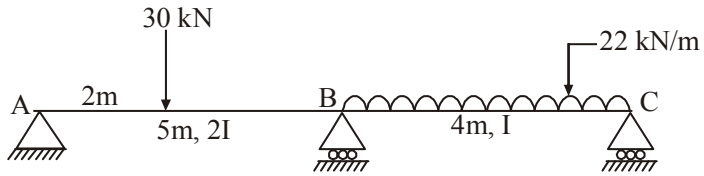

FIG.1

13. Develop the equilibrium equations to analyse the frame shown in Fig. (2) by slope deflection method.

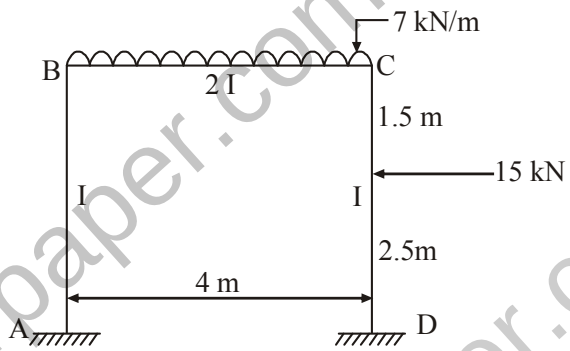

FIG.2

14. Using Muller Breslau Principle draw influence line diagram for reaction at the propped end and moment at the fixed end for a propped cantilever beam of span L.

15. Analyse the continuous beam shown in Fig. (3) by Kani's method.

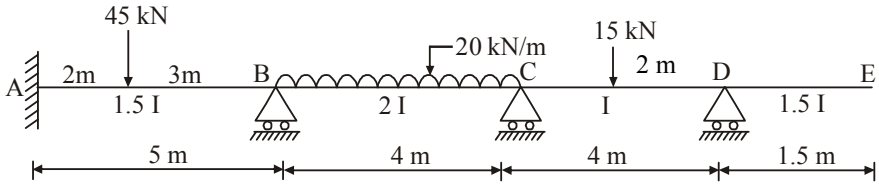

FIG.3

brpaper.com
brpaper.com

SECTION-C

16. Analyse the frame shown in Fig. (4) by moment distribution method and sketch the bending moment diagram.

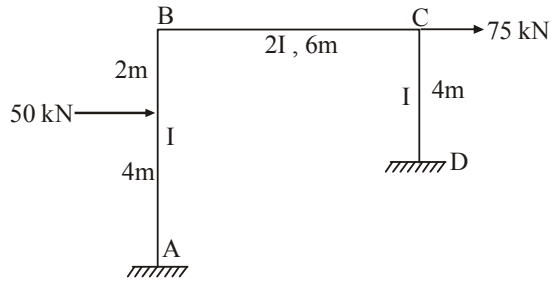

FIG.4

17. Analyse the frame shown in Fig. (5) by cantilever method.

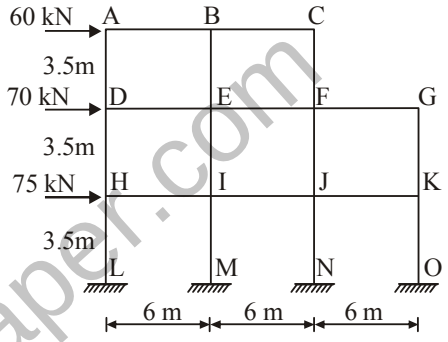

FIG.5

18. Analyse the truss shown in Fig. (6) by consistent deformation method. Assume that the cross sectional area of all members is same.

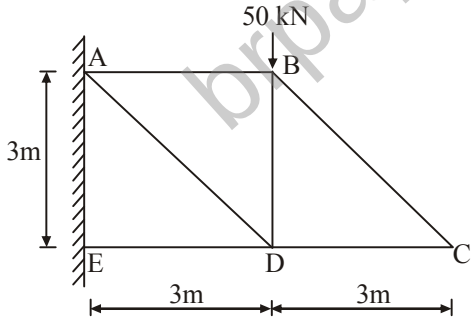

FIG.6

brpaper.com
brpaper.com