Roll No. [ ] Total No. of Pages : 02

Total No. of Questions : 18

B.Tech. (EE) (2018 Batch) (Sem.–3)

ANALOG ELECTRONICS

Subject Code : BTEE-302-18

M.Code : 76382

Time : 3 Hrs. Max. Marks : 60

INSTRUCTIONS TO CANDIDATES :

1. SECTION-A is COMPULSORY consisting of TEN questions carrying TWO marks each.
2. SECTION-B contains FIVE questions carrying FIVE marks each and students have to attempt any FOUR questions.
3. SECTION-C contains THREE questions carrying TEN marks each and students have to attempt any TWO questions.

SECTION-A

Write briefly :

1. Give comparison of Avalanche and Zener break down of a diode.
2. Define P-N junction diode. Also draw V-I characteristics of diode.
3. Why the input impedance in MOSFET is very high in comparison with BJT?
4. Why is an ordinary junction transistor is called bipolar transistor?
5. Give two reasons why an open-loop op-amp is unsuitable for linear applications?
6. What is the use of clipping circuits?
7. Define input offset current, input bias current the electrical parameters of op-amp.
8. What is the advantage of constant current sources over emitter bias in differential amplifier?
9. Define input offset voltage and explain why it exists in all op-amps?
10. "*Sometimes a lamp is used in one of the resistance arms of Weirt bridge oscillator*". Why?

BR paper
exams preparatory

SECTION-B

11. Explain V-I characteristics and structure of MOSFET.

12. With circuit diagram and output characteristics explain a simple transistor amplifier in CB configuration and write down the equation of DC load line.

13. What are the advantages of differential input and output amplifier? Briefly compare and contrast two differential amplifier configurations.

14. Describe the principle of operation of a Wein bridge oscillator and give the condition for sustained oscillation.

15. For the circuit shown in fig. (i) and fig. (ii) Find the maximum and minimum values of Zener diode current.

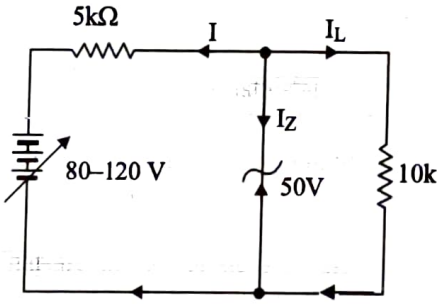

FIG. (i)

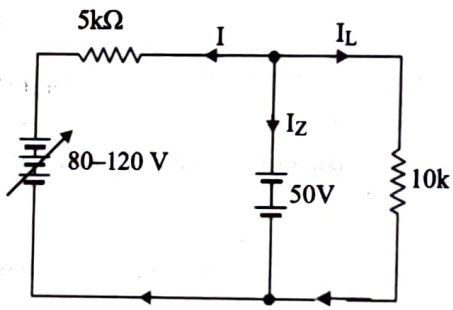

FIG. (ii)

SECTION-C

16. Draw circuit of three transistor amplifier configurations using NPN transistor and explain how a voltage amplification is achieved in CE configuration?

17. Explain difference between the integrator and differentiator and give one application of each.

18. Write short notes on the following :

    a) Phase shift oscillator

    b) Clamping and clipping circuits

NOTE : Disclosure of Identity by writing Mobile No. or Making of passing request on any page of Answer Sheet will lead to UMC against the Student.