Visit **www.brpaper.com** for downloading previous years question papers of
10th and 12th (PSEB and CBSE), IKPTU,MRSSTU, PSBTE, PANJAB UNIVERSITY,
PUNJABI UNIVERSITY, BFUHS, HPTU, HPSBTE , HARYANA DIPLOMA, MDU HARYANA

Roll No. **Total No. of Pages : 03**

Total No. of Questions : 18

B.Tech. (EE/Electrical & Electronics Engg.) (2018 Batch)
B.Tech. (Electronics & Electrical Engg.) (2018 Batch) (Sem.–3)

ENGINEERING MECHANICS

Subject Code : BTXX-XXX-18
M.Code : 76385

Time : 3 Hrs. **Max. Marks : 60**

INSTRUCTIONS TO CANDIDATES :

1. **SECTION-A is COMPULSORY consisting of TEN questions carrying TWO marks each.**
2. **SECTION-B contains FIVE questions carrying FIVE marks each and students have to attempt any FOUR questions.**
3. **SECTION-C contains THREE questions carrying TEN marks each and students have to attempt any TWO questions.**

SECTION-A

Write briefly :

1. Explain Eular's law?
2. Explain Scalar quantities.
3. What are rigid bodies? Explain.
4. Define a Free Body Diagram. Give two examples.
5. A body of mass 7.5 kg is moving with a velocity of 1.2 m/s. If a force of 15 N is applied on the body, determine its velocity after 2 s.
6. What do you understand by D'Alembert's principle?
7. Explain :
   a. Coefficient of friction
   b. Cone of friction.
8. Explain parallel and perpendicular axis theorem.
9. Define gyroscope.
10. Explain law of coulomb friction.

BR paper
exams preparatory

SECTION-B

11. Explain Symmetric and anti-symmetric tensor.

12. In the engine system shown in Fig.1, the crank AB has a constant clockwise angular velocity of 2000 rpm. For the crank position indicated, determine

    a. Angular velocity of the connecting rod BD

    b. The velocity of piston P.

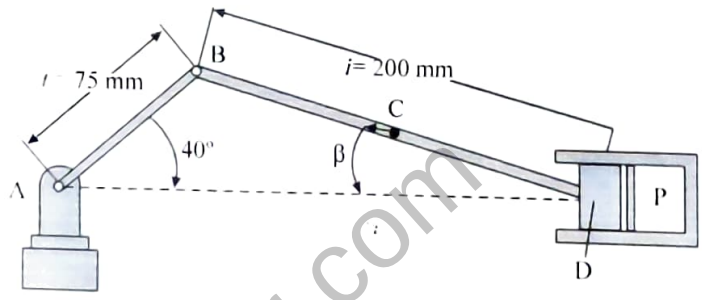

FIG.1

13. A uniform ladder of weight 800 N and of length 7 m rests on a horizontal ground and leans against a smooth vertical wall. The angle made by the ladder with the horizontal is 60°. When a man of weight 600 N stands on the ladder at a distance 4 m from the top of the ladder, the ladder is at the point of sliding? Determine the coefficient of friction between the ladder and the floor.

14. Find the radius of gyration of a triangle whose base is 40mm and height is 60mm about an axis passing through C.G. and parallel to base (Fig.2).

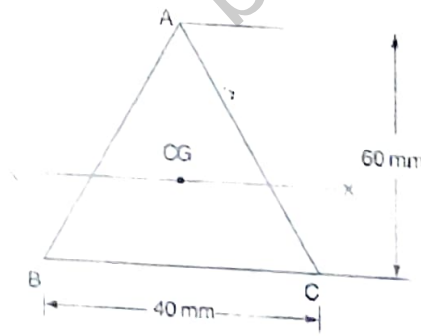

FIG.2

brpaper.com

15. A dynamics instructor demonstrates gyroscopic principles to his students. He suspends a rapidly spinning wheel with a string attached to one end of its horizontal axle. Describe the precession motion of the wheel.

SECTION-C

16. a. Distinguish kinematics & kinetics.

    b. Drive expression of the angular momentum of a system of point.

17. A beam ABCDEF of 7.5 m long and span 4.5 m is supported at B and E. The beam is loaded as shown in Fig.3. Find the support reactions at the two supports.

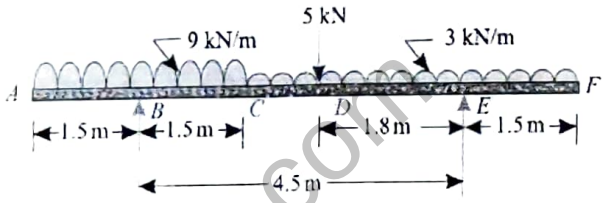

FIG.3

18. A solid steel shaft transmits 200 kW at 300 rpm. Determine the suitable diameter of the shaft if the maximum torque transmitted exceeds the mean 15% in each revolution. The shear stress is not to exceed 60 MPa. Also find the maximum angle of twist in a length of 4 m of the shaft. G = 80 GPa.

brpaper.com
brpaper.com

NOTE : Disclosure of Identity by writing Mobile No. or Making of passing request on any page of Answer Sheet will lead to UMC against the Student.