SYNTHETIX 4.0

Team BUZZKILL

TEAM MEMBERS

23BEC1359 – Rajana Pranav

23BEC1430 – Aditya Srivastava

23BEC1421 – Srineshkumar Subramanian

23BEC1464 – Monish Krishnanand

DESCRIPTION

Keeping in mind the necessary deliverables, tasks and constraints provided to the team, we have designed the following:

- **Main Task:** An appropriate bandpass filter to extract the useful information signal. Also, add a physical control that directly relates to signal shaping, while ensuring proper transient behavior, without any offset DC voltage (clipping), and a continuous output. Envelope detectors and phase inverting amplifiers were used along with the filter. A potentiometer (or rheostat) is connected with the inverting amplifier that tunes the gain, controlling the amplitude of the signal.

- **Bonus Challenge 1:** Another suitable filter, centered at 4kHz, to extract out the required frequency.

- **Bonus Challenge 2:** Signal Quality indicator has been designed using a enveloped detector. This circuit **has been included** with the circuit designed for the main task.

- **Bonus Challenge 3:** PCB Design of compact low-noise layout of the circuit designed in all above tasks.

OVERVIEW OF THE MAIN CIRCUIT

Main Task:

We use a filter of the following specifications to process out input analog signal.

- 8th Order Bandpass Chebyshev – I filter, implemented as 4 stages.
- Filter Passband Bandwidth: **600 Hz**
- Stopband Attenuation: **-100dB at 15kHz**
- Centre Frequency: **6kHz**
- Passband Ripple: **0.1 dB**

Along with this, between the signal source and the filter, we use a tiny 100pF capacitor to filter out any DC components that the signal may have.

Signal Quality Indicator

An envelope detector (diode + RC) measures the amplitude of the extracted signal and produces a DC voltage proportional to signal dominance.

Stage 3 – PCB Design

This is described in its relevant section near the end of the document.

BLOCK DIAGRAM

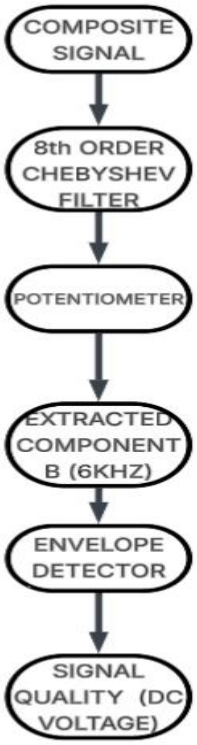

Signal Source Description

- The sensor inside the black box produces a composite analog signal consisting of useful information on embedded within multiple interference components and broadband noise.

- Consists of Low Frequency Drift, Useful Signal, Structured Interference, High Frequency Interference and Broadband White noise.

CHEBYSHEV FILTER SCHEMATIC & OUTPUT

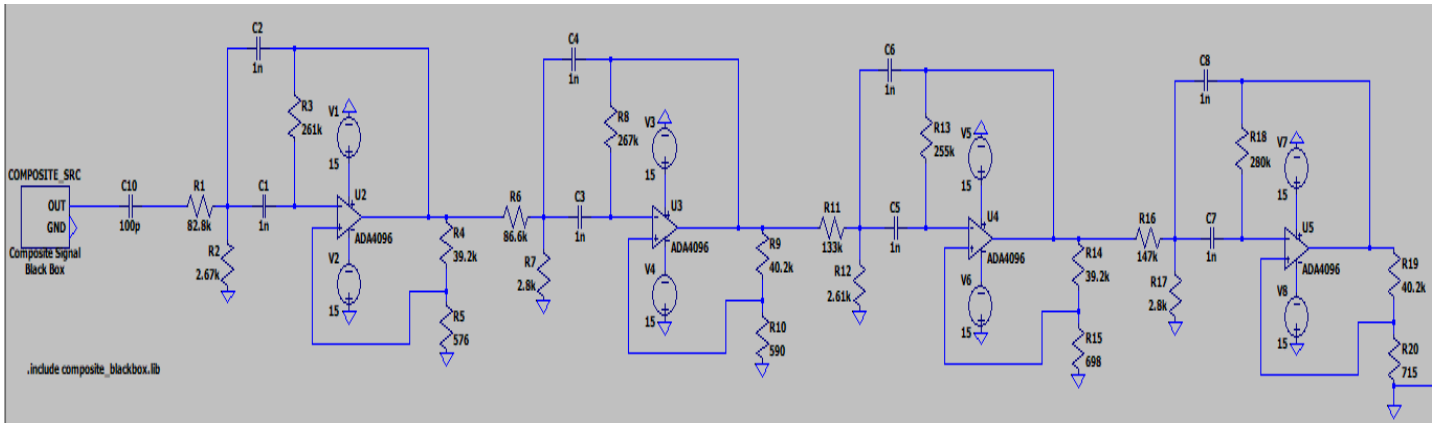

Transient output signal: This is the output from the filter when the signal source is the black box.

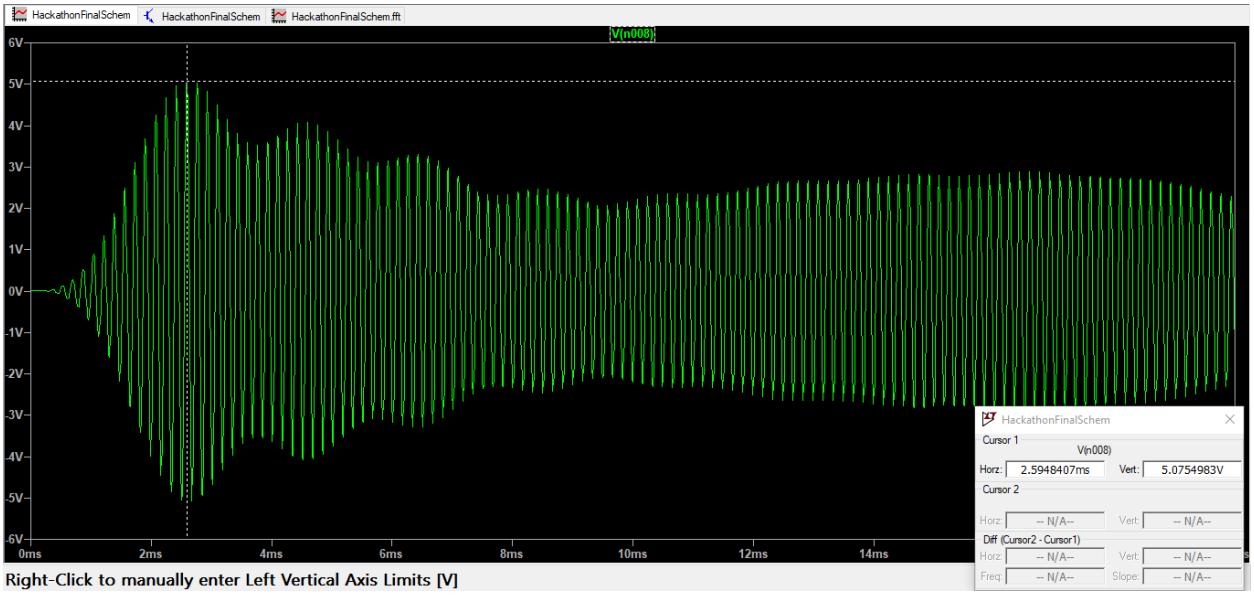

After filtering:

• The output waveform becomes a **clean sinusoidal signal at 6 kHz** and **Peak voltage of 5.07V**
• Most interference components are removed.

Frequency Domain Analysis:

- Simulated Centre Frequency = **6.03 kHz** (Sharp Peak)

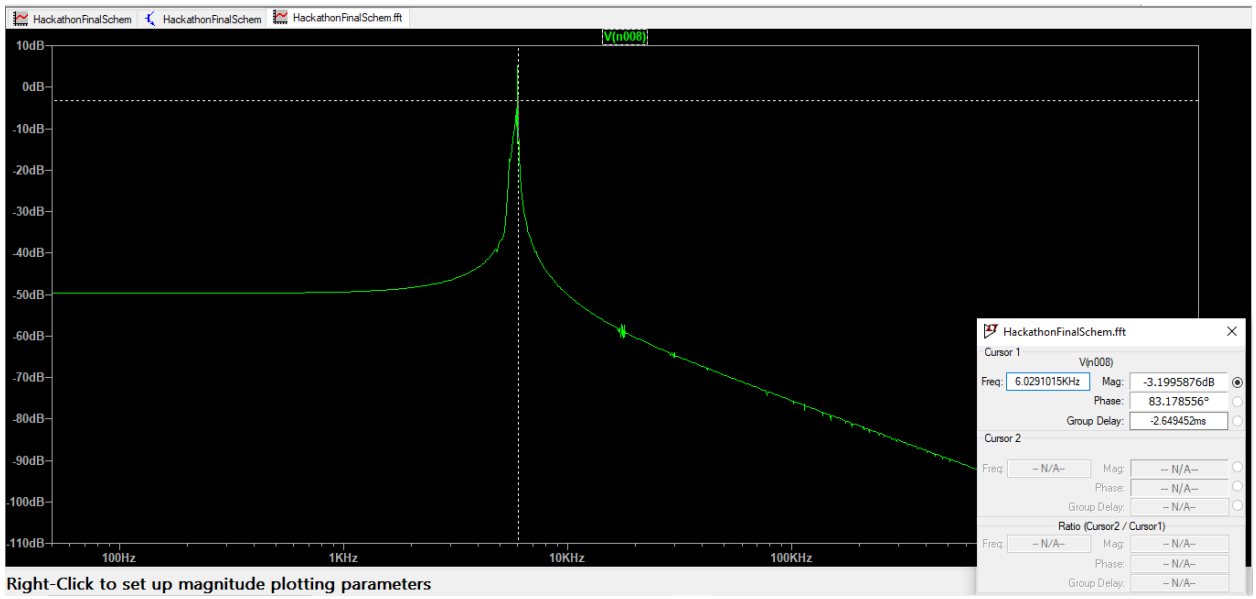

Hence there is strong attenuation outside the passband and unwanted high frequency components are suppressed on adding a capacitor at the source.

Inverting Amplifier

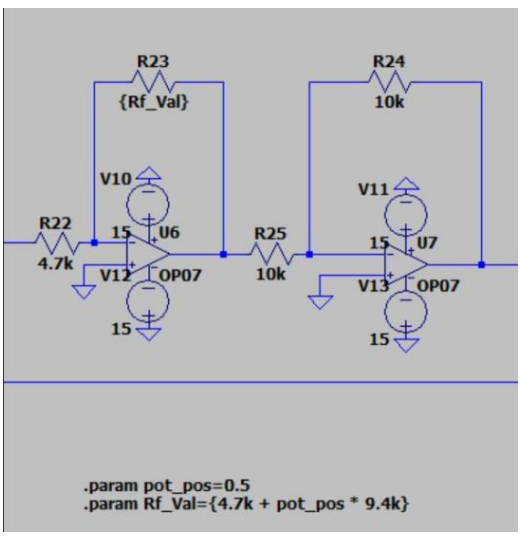

This circuit is an inverting operational amplifier (op-amp) amplifier with adjustable gain. The gain is controlled using a simulated potentiometer implemented with a parameterized resistor.

The gain here is limited from **1** to **2** only. This is primarily due to the fact that we wish to avoid saturation.

Components Used

- Op Amp (Op 07)
- Input Resistor (4.7k)
- Feedback Resistor (Rf_Val)

BONUS CHALLENGE 1: Filters for 4kHz and 8kHz

Hidden Operating Mode Robustness

Since the input signal frequency here can be detected by pre-analysis and then use the appropriate filter (manual adaption), two separate filters, one for 4kHz and another for 8kHz were designed.

4kHz Filter

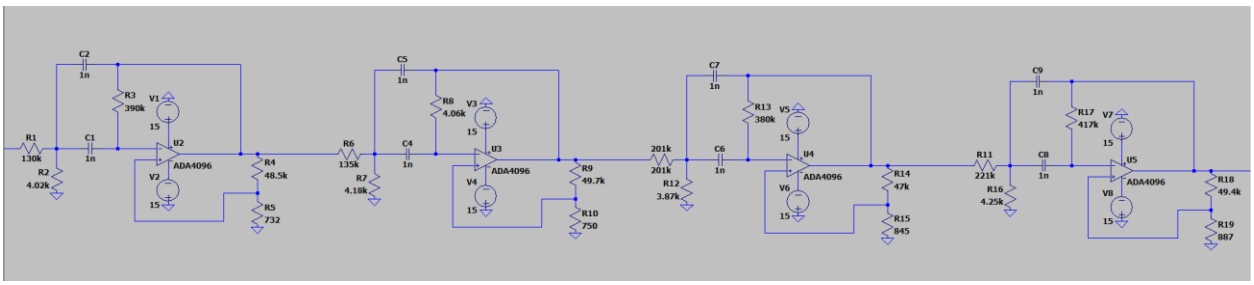

Filter Specifications

- 8th order Chebyshev – I filter, implemented as 4 stages.
- **40dB** gain in passband
- **400 Hz** filter bandwidth
- **-100dB** attenuation at **15kHz**.
- **0.1dB** passband ripple.

8kHz Filter

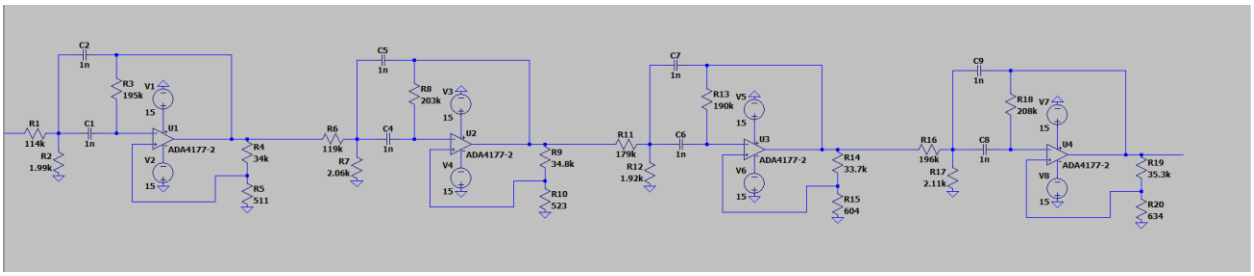

Filter Specifications

- 8th order Chebyshev – I filter.
- **20dB** passband gain
- **800Hz** filter bandwidth.

Filter Outputs

To test the filters, we give a input signal with multiple frequencies and we add white noise.

- For **4kHz**, input consists of sine waves with frequencies of 3kHz, 4kHz and 5kHz added with white noise.
- For **8kHz**, input consists of sine waves with frequencies of 7kHz, 8kHz and 9kHz added with white noise.

4kHz Input and Output Frequency Spectra

Input Spectrum (Fast Fourier Transform of the transient input signal)

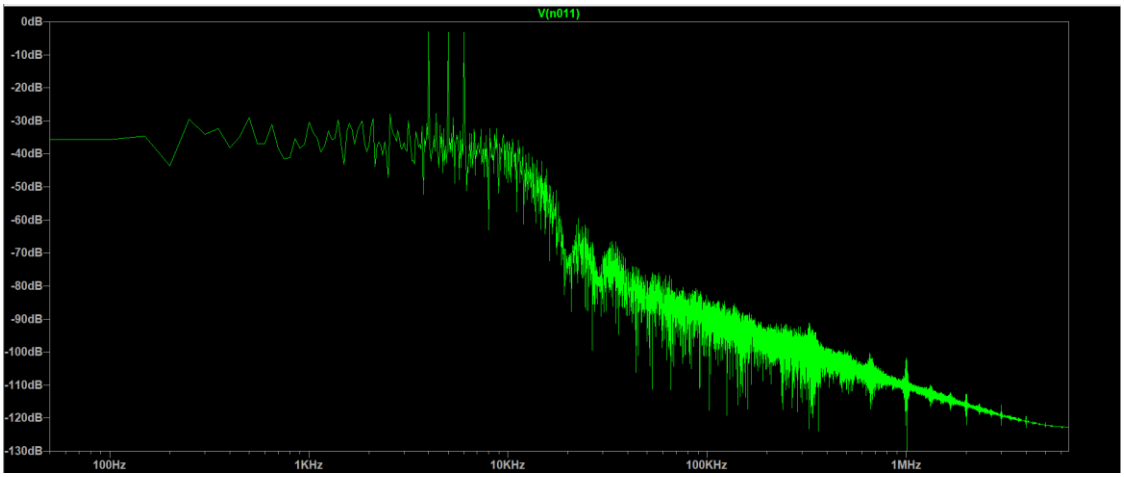

Output Spectrum (Fast Fourier Transform of the transient output of the filter)

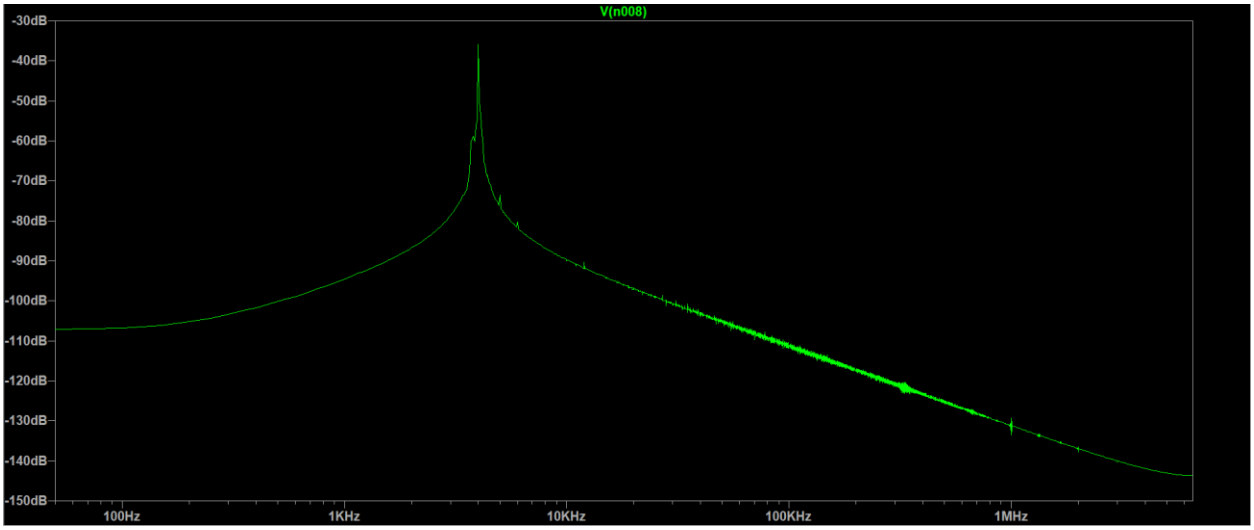

8kHz Input and Output Frequency Spectra

Input is the black box, so the same as for 4kHz.

Output Spectrum

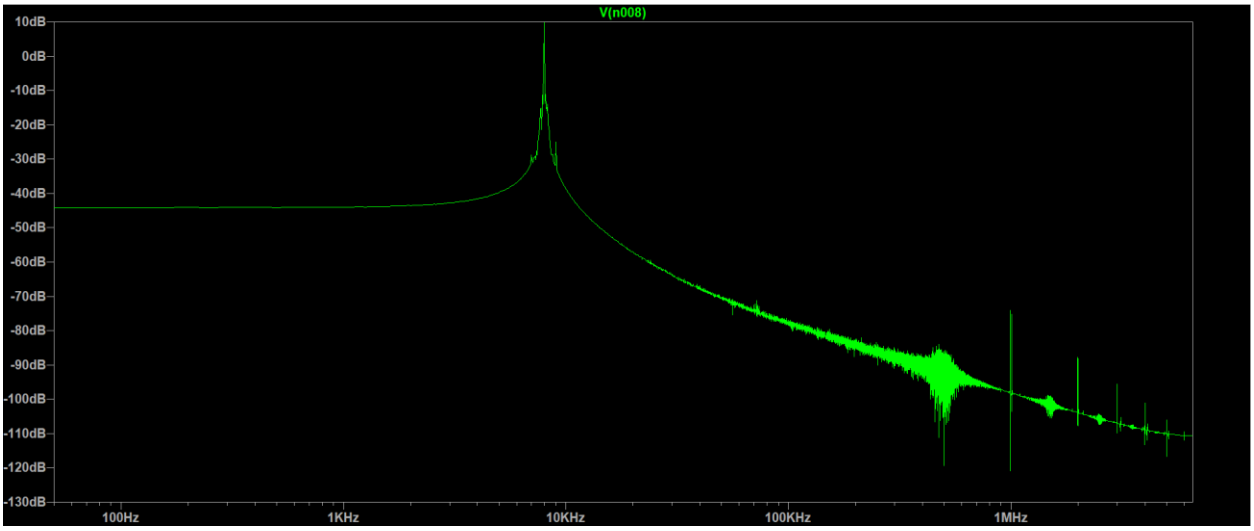

CHALLENGING TASK 2: SIGNAL QUALITY INDICATOR (SQI)

The envelope detector consists of:

- Diode (1N914)
- 1µF Capacitor
- 100kΩ Resistor.

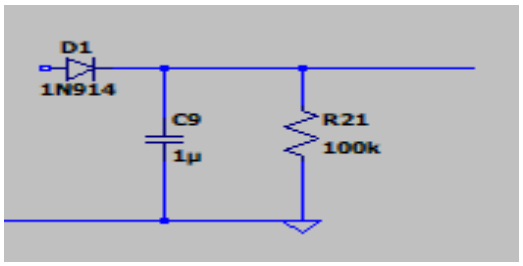

- The diode **rectifies the positive peaks** of the filtered signal.
- The capacitor stores the peak voltage.
- The resistor slowly **discharges the capacitor**.
- The output becomes a smooth DC voltage proportional to signal amplitude.

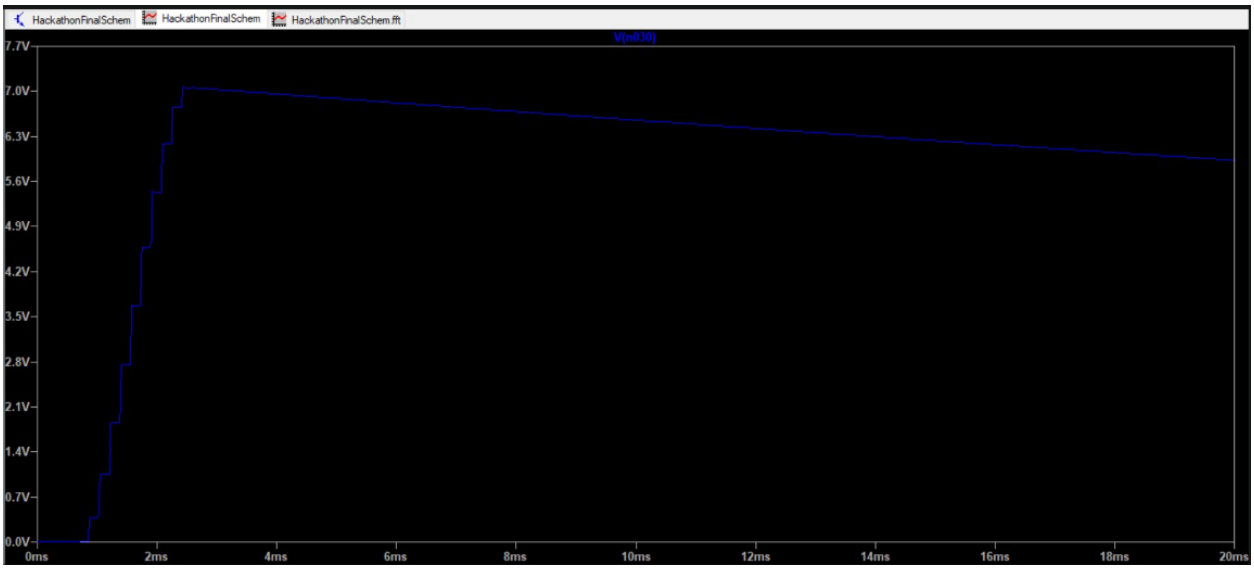

The capacitor charges to a maximum of a little higher than **7V.**

The initial rise is due to the charging of the capacitor and it stabilizes to desired envelope output indicating a good signal extraction and quality.

The working basis for our SQI detector is simply – higher amplitude, higher in the frequency component of our desired signal.

For Good Signal – The voltage is **> 5V** (due to filter and amplifier gains). In our case

For Bad Signal – Usually quite low voltages, **< 1V.** Below is an example of a **1kHz** sinusoidal source. Since our filter gives about a **-50dB** attenuation here, the output is a little less than **120µV,** which indicates terrible signal quality.

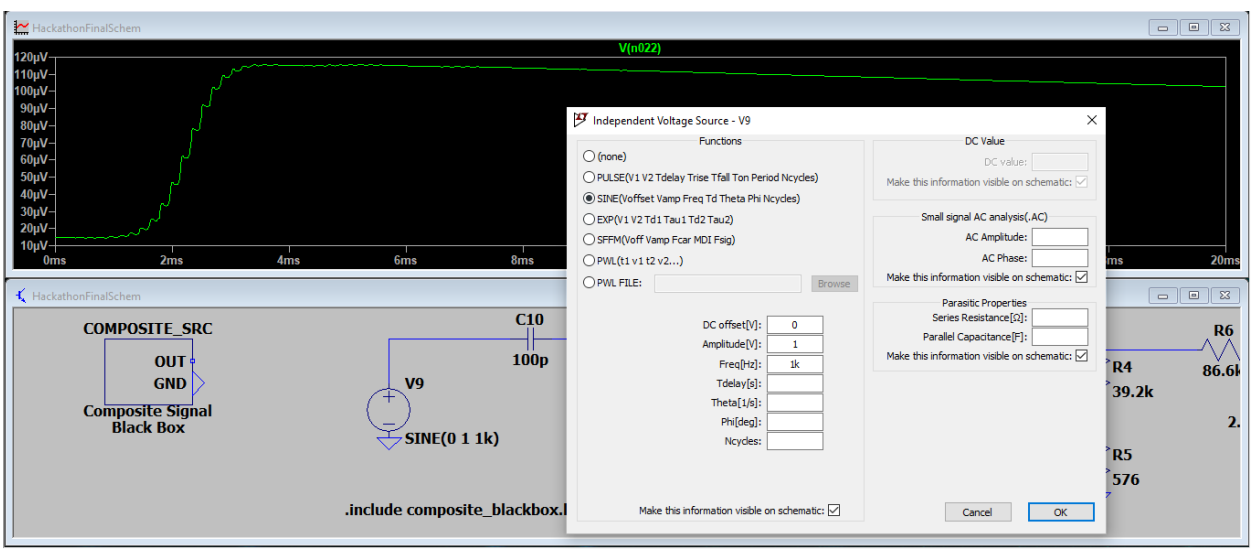

BONUS CHALLENGE 3: PCB DESIGN

PCB CIRCUIT SCHEMATIC

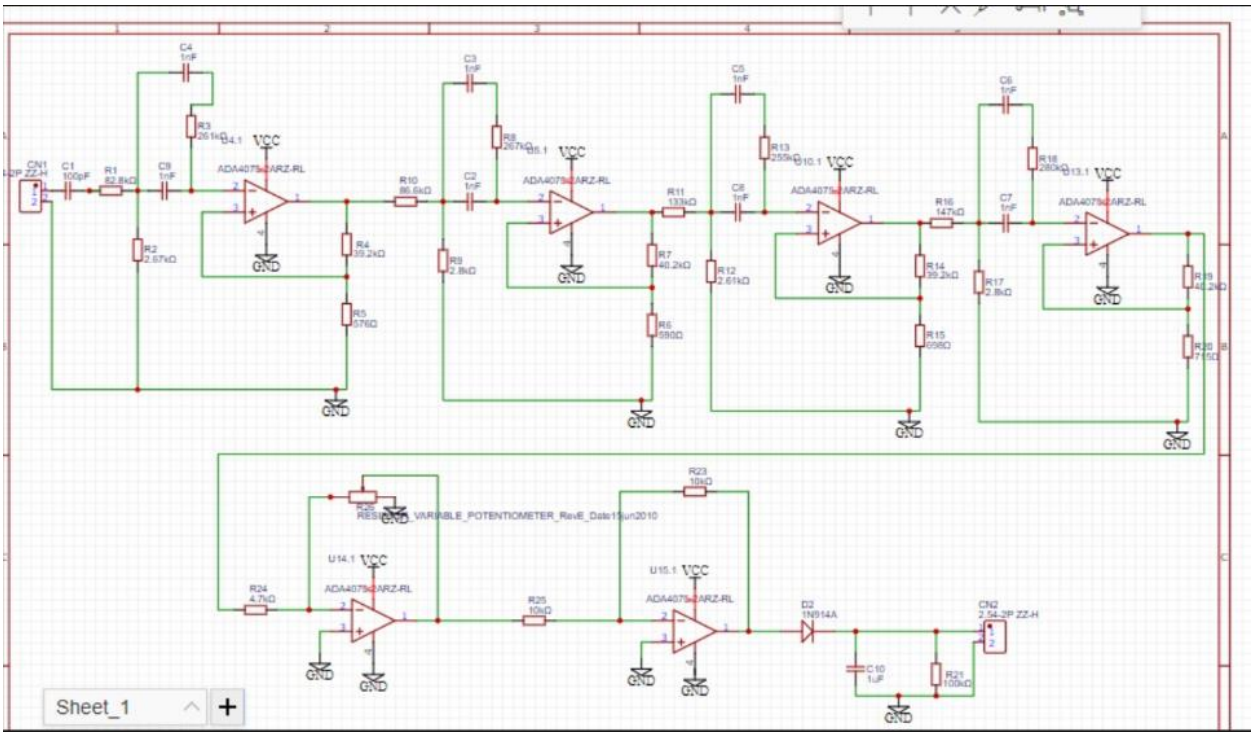

GROUNDING AND NOISE STRATEGY

The circuit uses a carefully designed grounding and noise reduction strategy to ensure accurate signal processing. Ground (GND) acts as the common reference point for all stages of the circuit, including the input network, amplifier stages, and output section. All signals are measured with respect to this ground node, which helps maintain a stable voltage reference. Each operational amplifier stage connects to ground through local resistors and capacitors, which helps minimize long current paths and reduces unwanted interference.

To further reduce noise, the circuit ideally follows a star grounding technique, where all ground connections are brought to a single common point. This prevents ground loops, which can introduce unwanted voltage differences and noise into sensitive analog signals. The circuit is entirely analog, so maintaining a clean analog ground helps prevent disturbances that could affect the amplifier stages.

At the output stage, a diode with a capacitor and resistor forms a smoothing filter that converts the processed AC signal into a stable DC voltage while reducing ripple and noise. Overall, the grounding structure, filtering components, and proper signal referencing ensure that the circuit minimizes interference and provides a clean, reliable output signal.