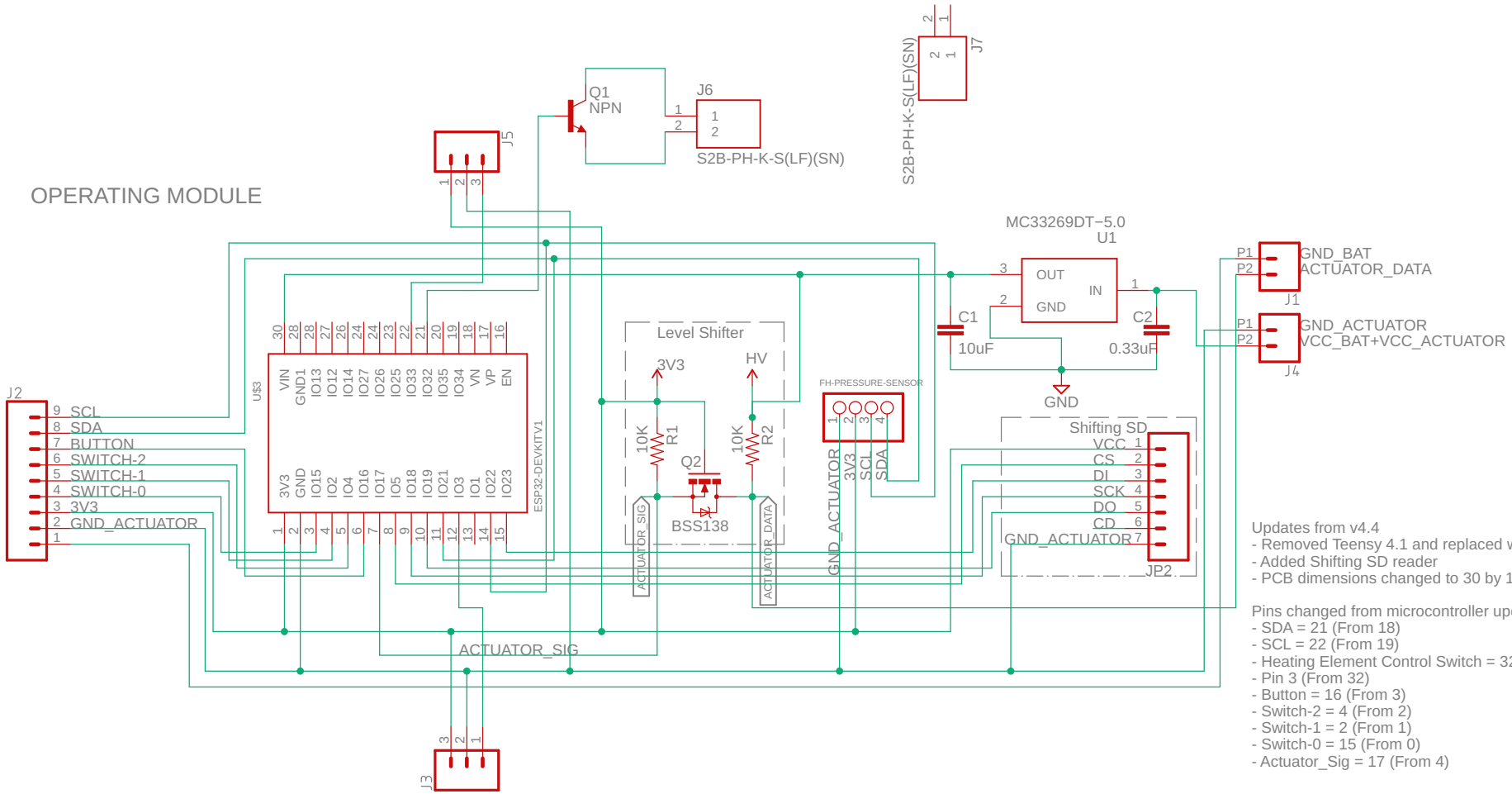

Updates from v4.4
- Removed Teensy 4.1 and replaced with ESP32 Devkit V1
- Added Shifting SD reader
- PCB dimensions changed to 30 by 118.4 from 24.3 by 118.4.

Pins changed from microcontroller update:
- SDA = 21 (From 18)
- SCL = 22 (From 19)
- Heating Element Control Switch = 32 (From 34)
- Pin 3 (From 32)
- Button = 16 (From 3)
- Switch-2 = 4 (From 2)
- Switch-1 = 2 (From 1)
- Switch-0 = 15 (From 0)
- Actuator_Sig = 17 (From 4)