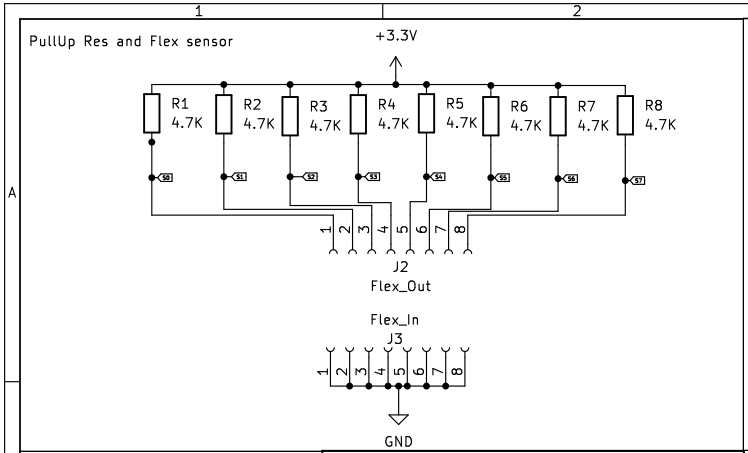

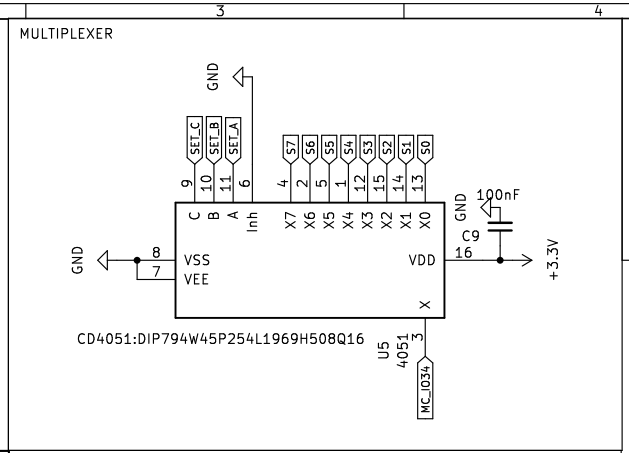

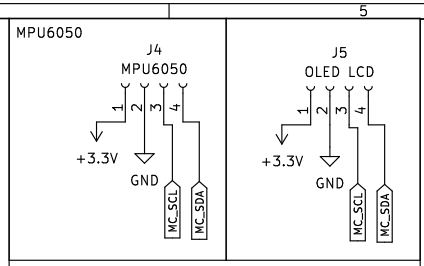

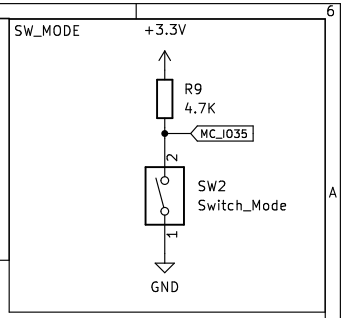

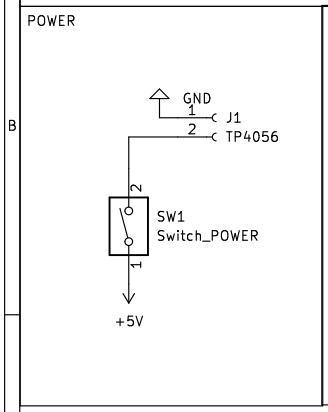

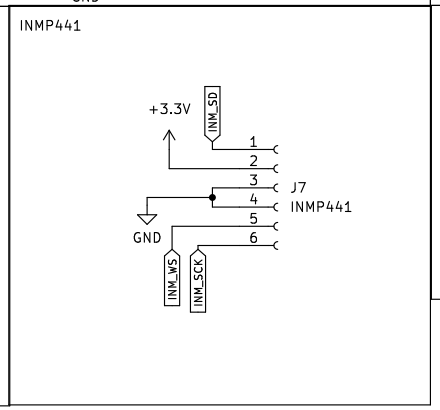

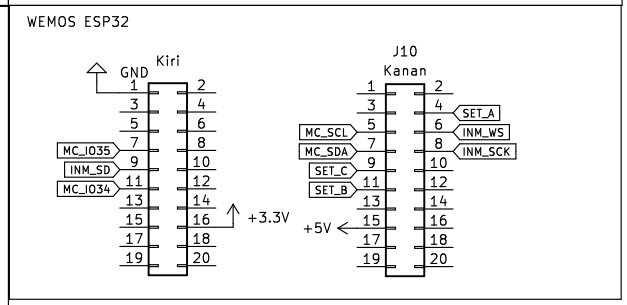

Sheet: /
File: wemosglov.kicad_sch

Title: GLOVITOO PROTO_V1_SCHEMA_xMaulana

Size: A4	Date:	**Rev:**
KiCad E.D.A. kicad 7.0.10		Id: 1/1