UNIVERSITEIT VAN PRETORIA
UNIVERSITY OF PRETORIA
YUNIBESITHI YA PRETORIA
Faculty of Engineering, Built Environment and Information Technology

ELI 220

Practical Report 3

Group 16

Name and Surname	Student Number	Signature	% Contribution
A. van Niekerk	19007583		33.3
R. van Zyl	19013168		33.3
B. Oelofse	19103281		33.3

By signing this assignment we confirm that we have read and are aware of the University of Pretoria's policy on academic dishonesty and plagiarism and we declare that the work submitted in this assignment is our own as delimited by the mentioned policies. We explicitly declare that no parts of this assignment have been copied from current or previous students' work or any other sources (including the internet), whether copyrighted or not. We understand that we will be subjected to disciplinary actions should it be found that the work we submit here does not comply with the said policies.

November 2, 2020

Contents

1 Introduction 1
2 Preparatory Work 2
  2.1 Chebyshev low-pass filter 2
  2.2 Butterworth high-pass filter 11
  2.3 Minimal ripple band-pass filter 17
3 Practical Results 26
  3.1 Chebyshev low-pass filter 26
  3.2 Butterworth high-pass filter 28
  3.3 Minimal ripple band-pass filter 31
4 Discussion 33
5 Conclusion 34

A Python Code **36**

1 Introduction

This report covers the design and implementation of three separate active signal filters that being Chebyshev, Butterworth and Minimal ripple with a distinct set of specifications for each. Each of these filters was then simulated in LTSpice to check the validity of the design, and thereafter plot their individual responses using the appropriate modules in Python.

2 Preparatory Work

2.1 Chebyshev low-pass filter

$$
\begin{aligned}
Chevbyshev &- \text{low-pass} \\
&- \text{cut off } 4KHz \\
&- \text{passband } 1dB \\
&- 60dB/\text{decoder decay}
\end{aligned}
$$

a)

$$
\begin{aligned}
S_{Ln} &= \frac{S}{\omega_0} \\
\omega_0 &= 2\pi(4000)rad/s \\
\omega_0 &= 8000\pi rad/s \\
\omega &= 2\pi f \\
n &= \frac{60}{20} = 3 \\
a_0 &= 0.4913
\end{aligned}
$$

$$
\begin{aligned}
H_L(S) &= \frac{0.4913}{0.4913 + 1.2384\left(\frac{S}{\omega_0}\right) + 0.9883\left(\frac{S}{\omega_0}\right)^2 + \left(\frac{S}{\omega_0}\right)^3} \\
H_L(\omega) &= \frac{0.4913}{0.4913 + 1.2384\left(\frac{\omega}{\omega_0}\right) + \left(0.9883\left(\frac{\omega}{\omega_0}\right)\right)^2 + \left(\frac{\omega}{\omega_0}\right)^3} \\
H_L(f) &= \frac{0.4913}{0.4913 + 1.2384\left(\frac{jf}{4000}\right) + 0.9883\left(\frac{jf}{4000}\right)^2 + \left(\frac{jf}{4000}\right)^3}
\end{aligned}
$$

b)

$$|H(f)| = \frac{0.4913}{\sqrt{(0.4913) + \left(1.2384\left(\frac{f}{4000}\right)\right)^2 + \left(0.9883\left(\frac{f}{4000}\right)^2\right)^2 + \left(\left(\frac{f}{4000}\right)^3\right)^2}}$$

$$|H(f)| = \frac{0.4913}{\sqrt{\left(0.4913 - 0.9883\left(\frac{f}{4000}\right)^2\right)^2 + \left(1.2384\left(\frac{f}{4000}\right) - \left(\frac{f}{4000}\right)^3\right)^2}}$$

$$H(f) = \frac{0.4913}{(0.4913) + 1.2384\left(\frac{jf}{4000}\right)^2 + 0.9883\left(\frac{jf}{4000}\right)^2 + \left(\frac{jf}{4000}\right)^3} \times X(f)$$

$$\angle H(f) = \angle Y(f) - \angle X(f)$$

$$tan^{-1}\left(\frac{0}{0.4913}\right) = 0$$

$\angle X(f) \Rightarrow$

$$Real = 0.4913 - 0.9883\left(\frac{f}{4000}\right)^2$$

$$Img = 1.2384\left(\frac{jf}{4000}\right) + \left(\frac{jf}{4000}\right)^3$$

$$\angle H(f) = tan^{-1}\left(\frac{1.2384\left(\frac{f}{4000}\right) + \left(\frac{f}{4000}\right)^3}{0.4913 - 0.9883\left(\frac{f}{4000}\right)^2}\right)$$

$$\therefore \angle H(f) = -tan^{-1}\left(\frac{1.2384\left(\frac{f}{4000}\right) + \left(\frac{f}{4000}\right)^3}{0.4913 - 0.9883\left(\frac{f}{4000}\right)^2}\right)$$

$$\therefore \angle H(f) = -tan^{-1}\left(\frac{1.2384\left(\frac{f}{4000}\right) - \left(\frac{f}{4000}\right)^3}{0.4913 - 0.9883\left(\frac{f}{4000}\right)^2}\right)$$

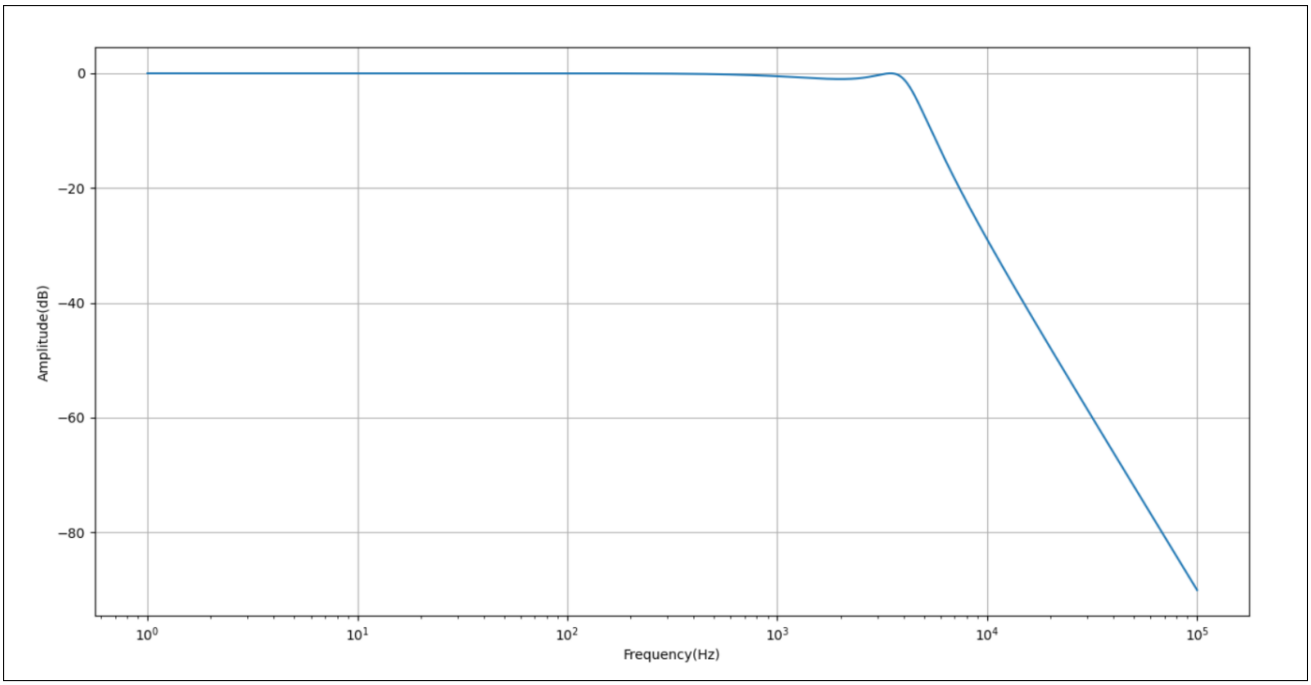

Figure 2.1.1: Amplitude of Low pass Chebyshev active filter

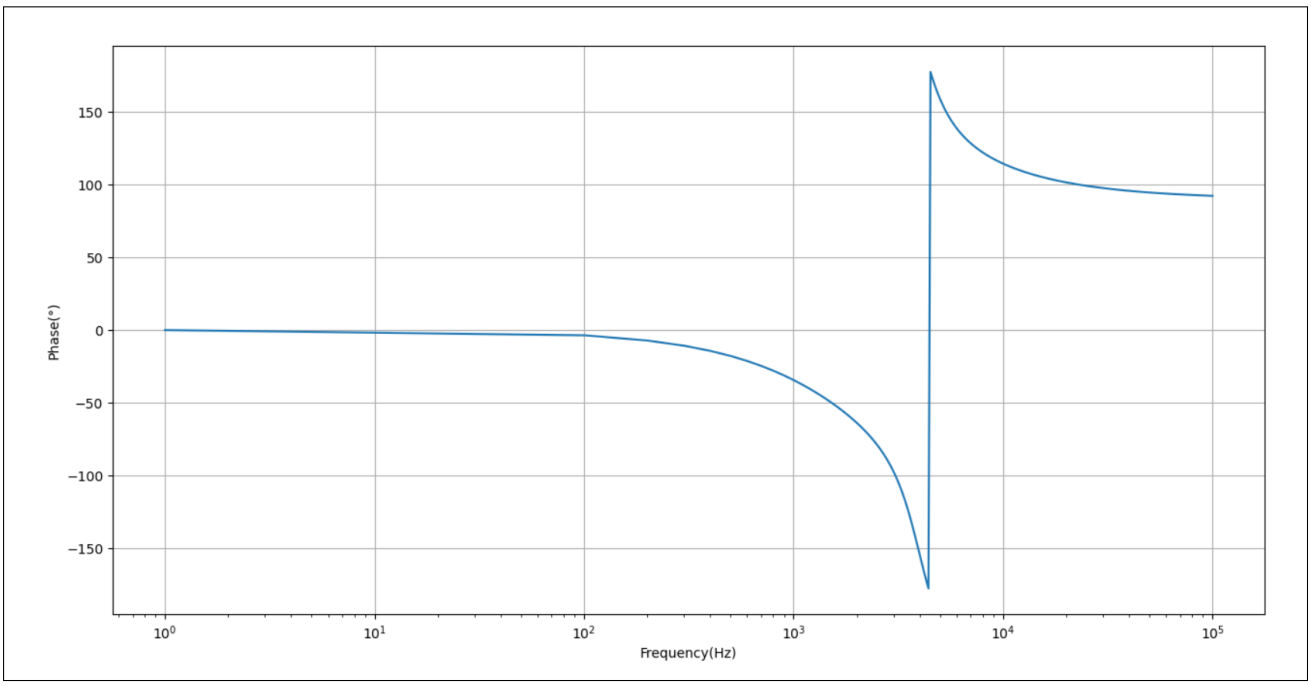

Figure 2.1.2: Phase response of the Chebyshev low pass filter

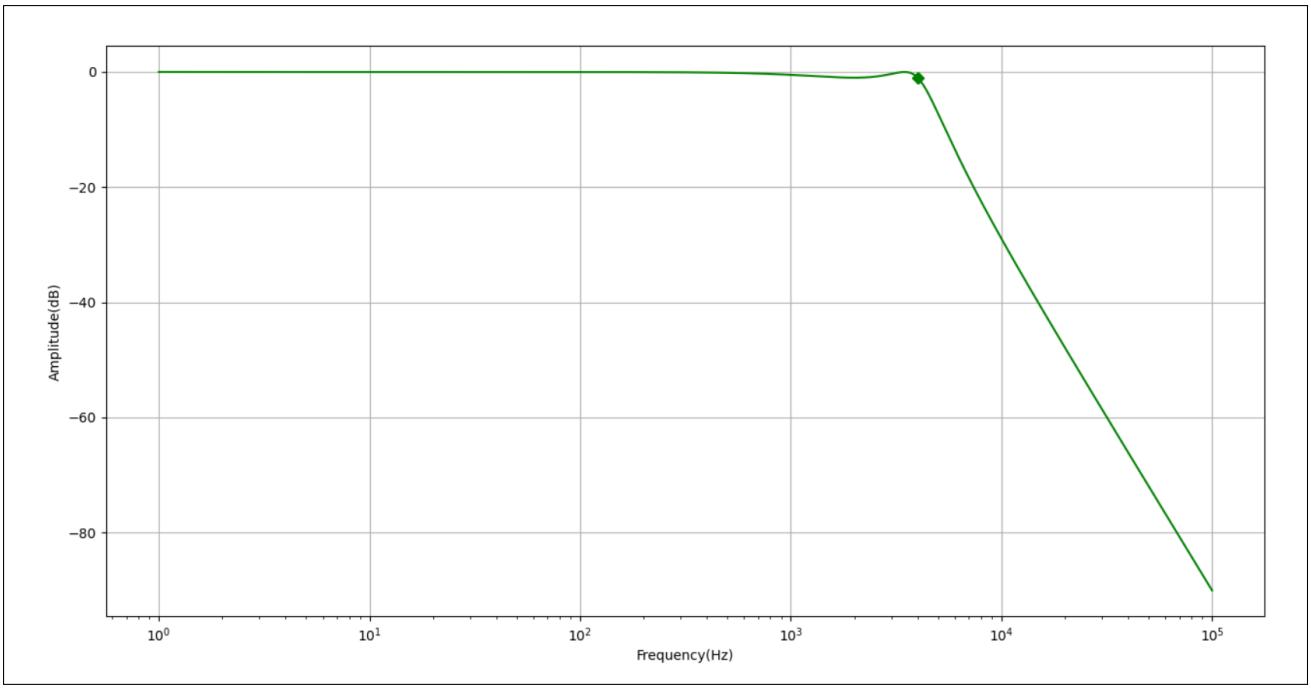

Figure 2.1.3: Amplitude with Fc of 4kHz

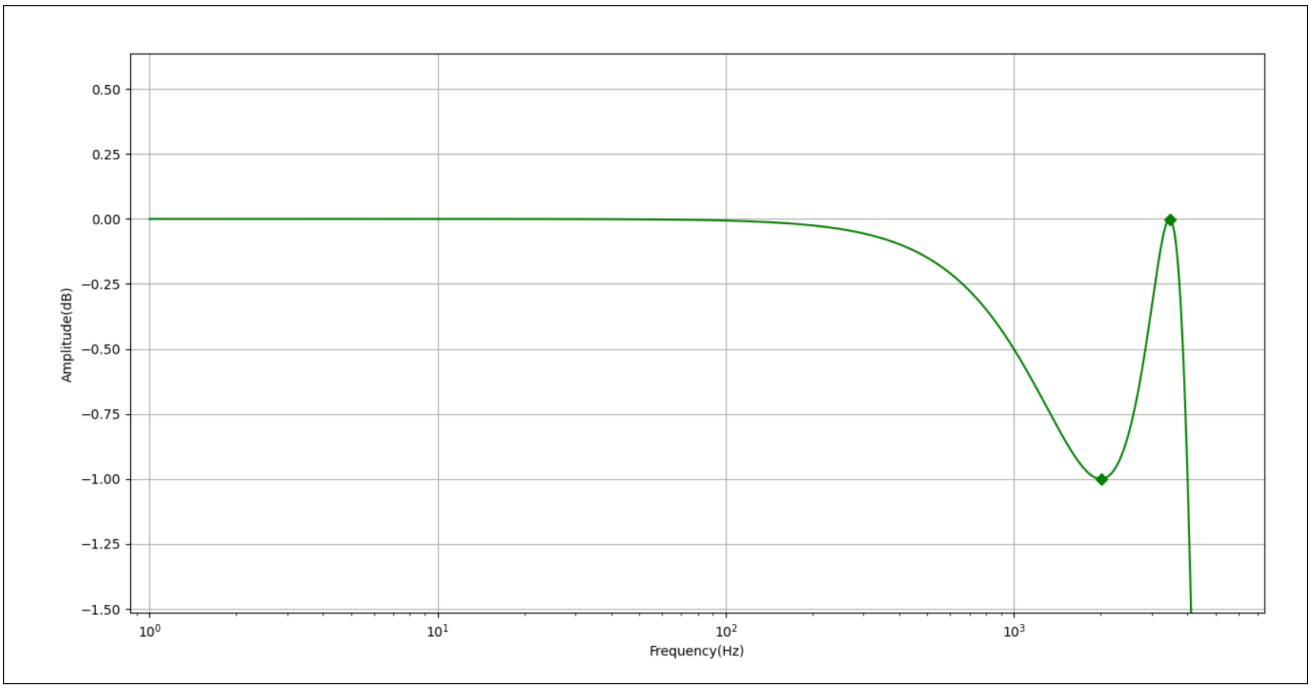

Figure 2.1.4: Amplitude with passband of 1dB

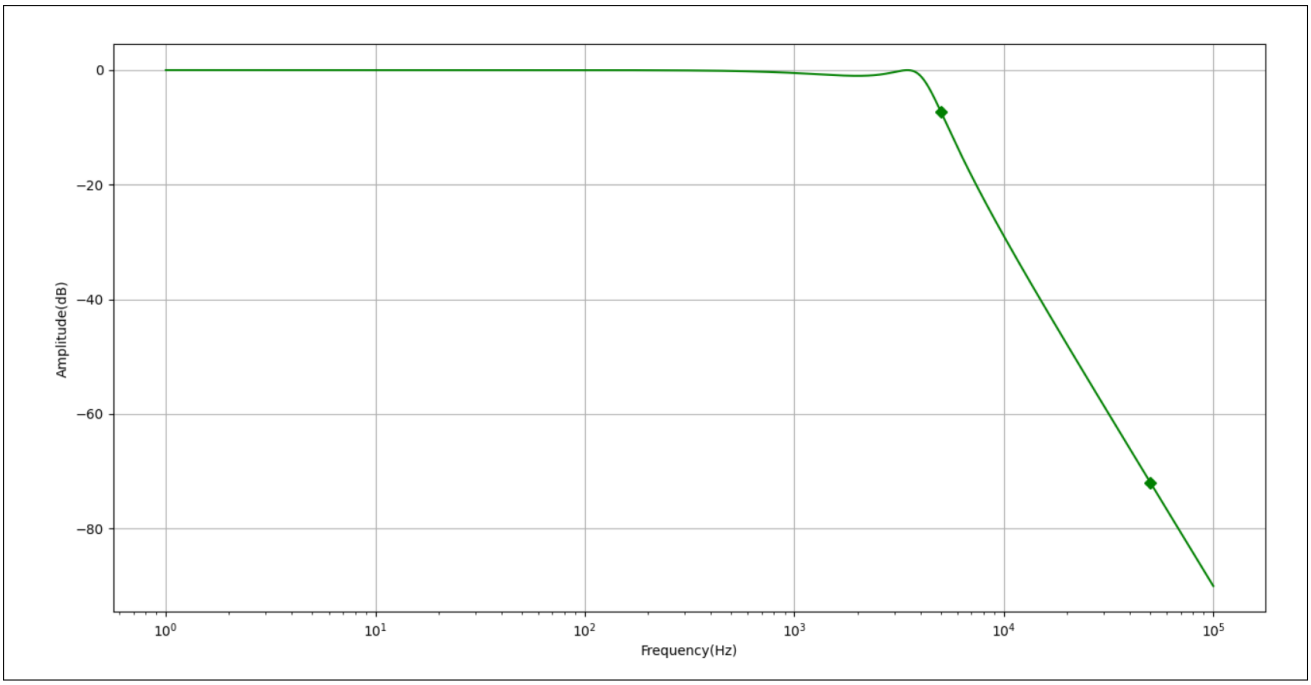

Figure 2.1.5: Amplitude with decay of 60dB/Decade

c)

$$H(S) = \frac{a_0}{(s^2 + l_0 S + q_{01}^2) \times (q_{11} + S)}$$
$$\therefore H(S) = \frac{0.4942}{(s^2 + 0.4942S + 0.9942) \times (0.4942 + S)}$$

$$q_{01}^2 = 0.9942$$
$$\therefore q_{01} = 0.9971$$
$$l_0 = \frac{q_{01}}{Q}$$
$$0.4942 = \frac{0.9971}{Q}$$
$$\text{Reactance: } Q = 2.0176$$

$$\frac{V_0}{V_{in}} = \frac{\frac{k}{R_1C_1R_2C_2}}{S^2 + S\left[\frac{R_1C_1+R_2C_2+R_1C_1(1-k)}{R_1C_1R_2C_2}\right] + \frac{1}{R_1C_1R_2C_2}}$$

$$Q = \frac{\sqrt{R_1 C_1 R_2 C_2}}{R_1 C_2 + R_2 C_2}$$
$$\omega_c \times q_{01} = \frac{1}{R\sqrt{C_1 C_2}}$$

Make so that: $R_1 = R_2 = R$

$$\therefore Q = 0.5\sqrt{\frac{C_1}{C_2}}$$
$$\therefore \frac{1}{R\sqrt{C_1 C_2}} = 8000\pi \times 0.9971$$

Let $C_1 = 100nF$

$$2.0176 = 0.5\sqrt{\frac{100 \times 10^{-9}}{C_2}}$$
$$\therefore C_2 = 6.14 \times 10^{-9}$$
$$= 6.14nF$$

$$\therefore \frac{1}{R\sqrt{(100 \times 10^{-9})(6.14 \times 10^{-9})}} = 8000\pi \times 0.9971$$

$$\therefore R_1 = R_2 = R = 1586.1$$
$$q_{11} = 0.4942$$

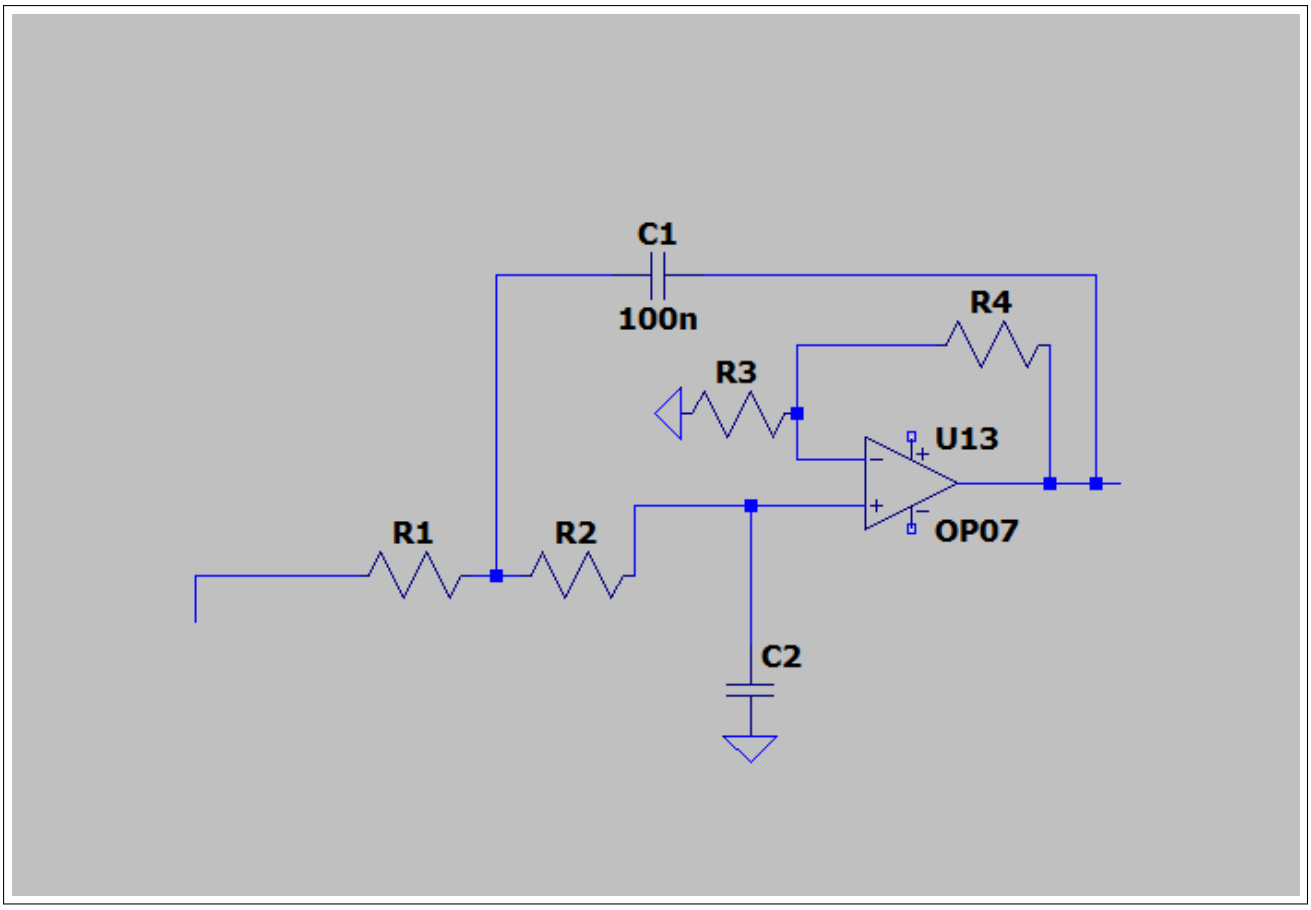

Figure 2.1.6: Figure used for next calculations

for 1dB pass band ripple $20\log(A) = 1$ thus
$A = 1.122$

$$A = 1 + \frac{R_4}{R_3}$$
$$1.122 = 1 + \frac{R_4}{R_3}$$
$$\therefore 0.122 = \frac{R_4}{R_3}$$

Use R_3 as $10k\Omega$
$\therefore R_4 = 1.2k\Omega$

$$\omega_c \times q_{01} = \frac{1}{RC}$$
$$8000\pi \times 0.4942 = \frac{1}{RC}$$

Use C as 10nF

$$8000\pi \times 0.4942 = \frac{1}{R(10nF)}$$

$$\therefore R = 8k\Omega$$

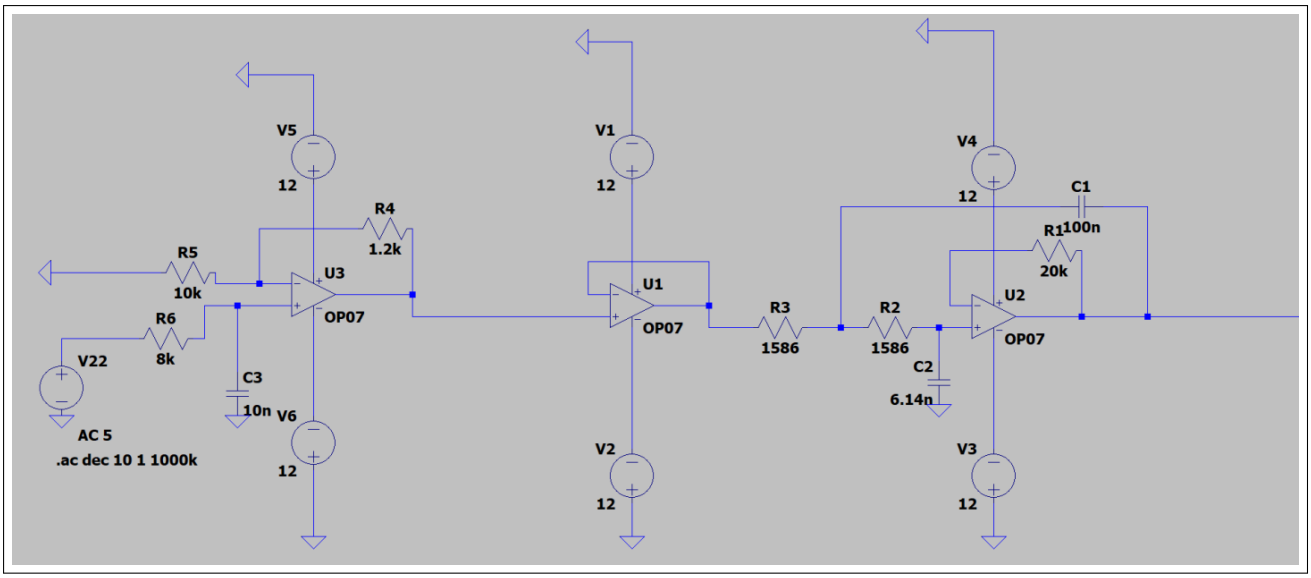

Figure 2.1.7: Circuit Diagram

d)

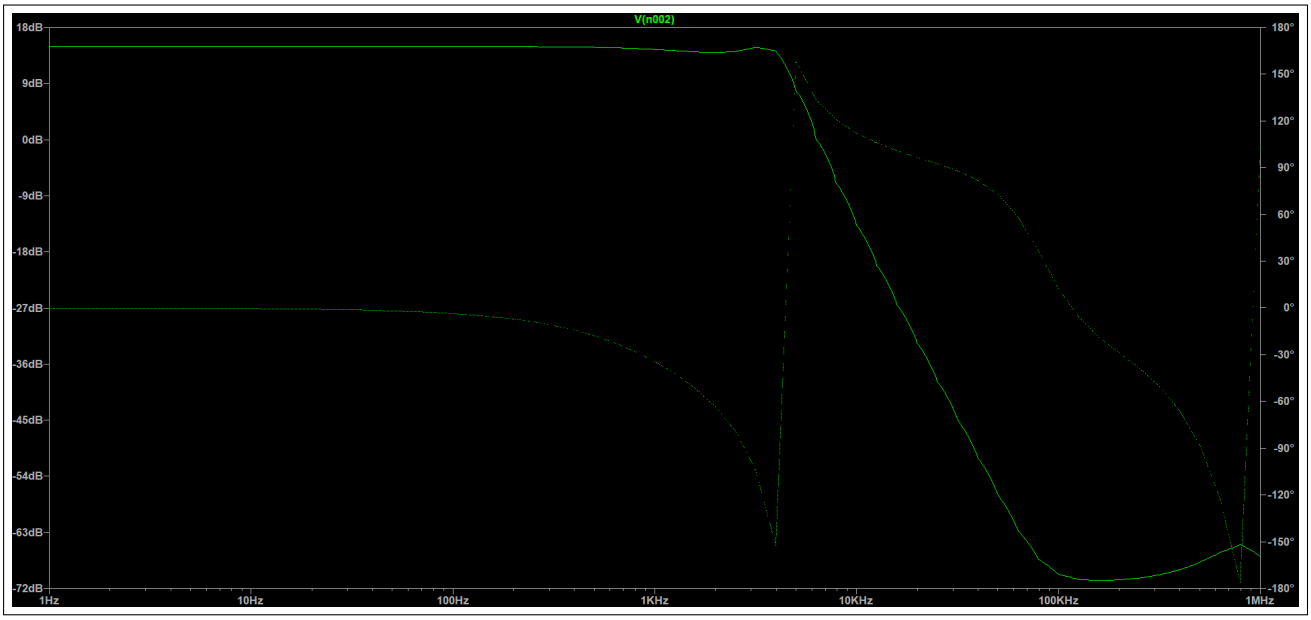

Figure 2.1.8: Frequency sweep of both amplitude and phase response

e)

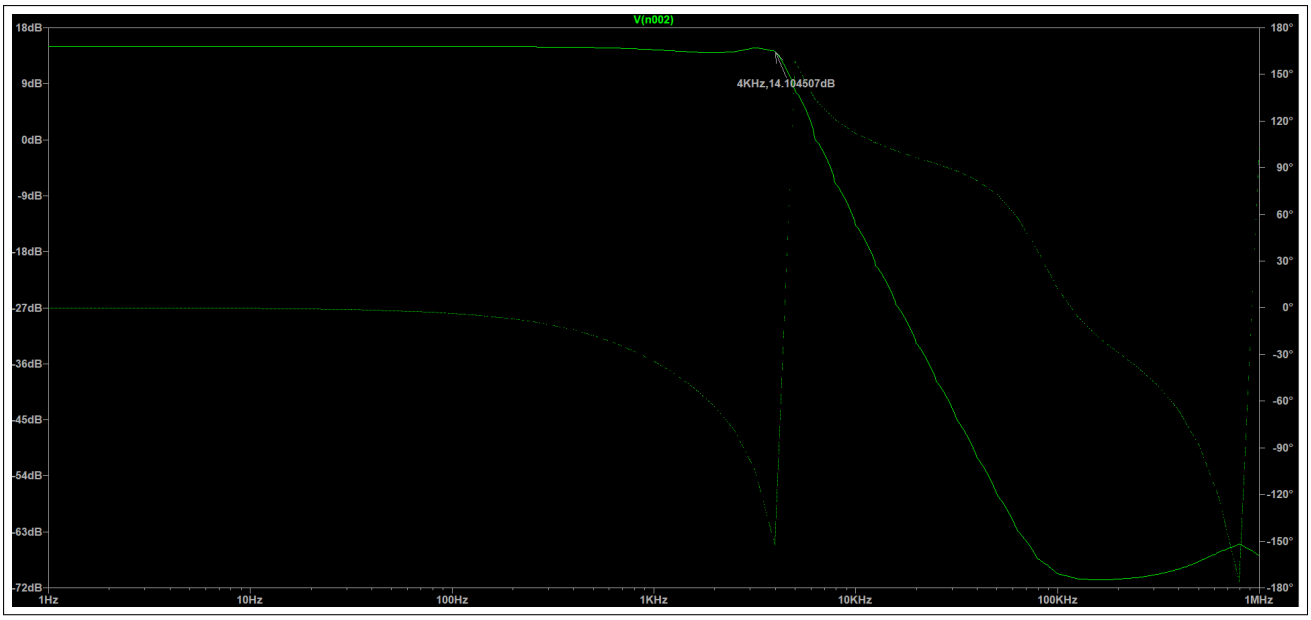

Figure 2.1.9: Fc(cutoff frequency) at 4kHz

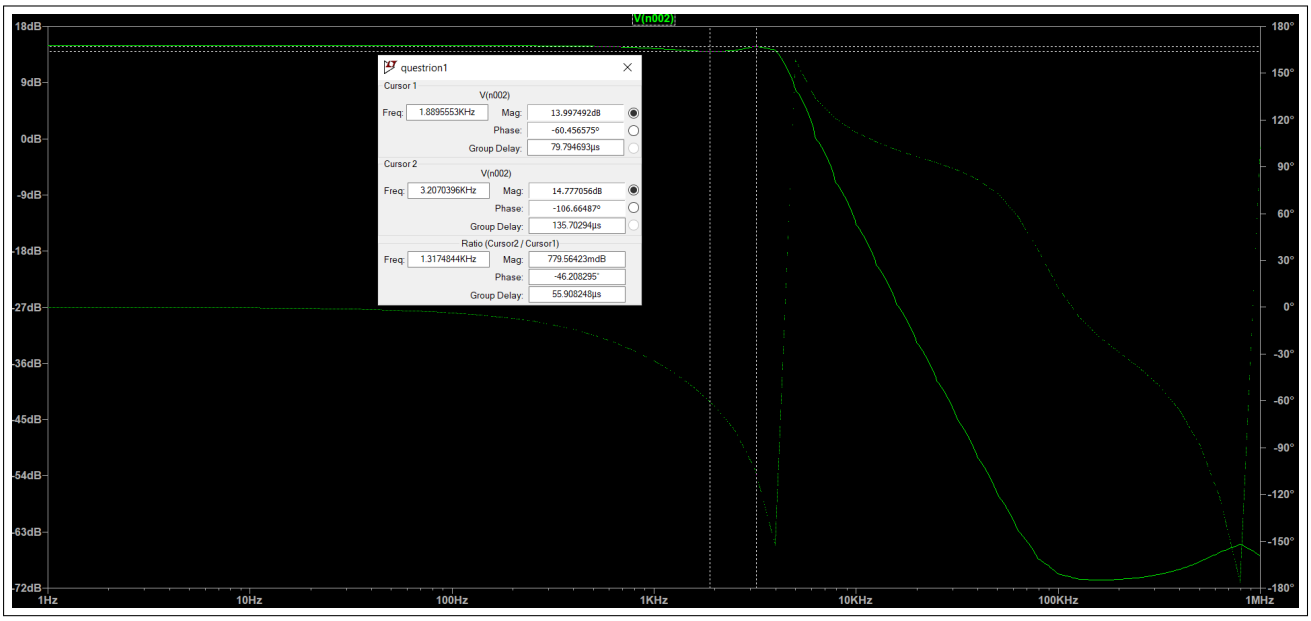

Figure 2.1.10: Pass band ripple of 780mdB

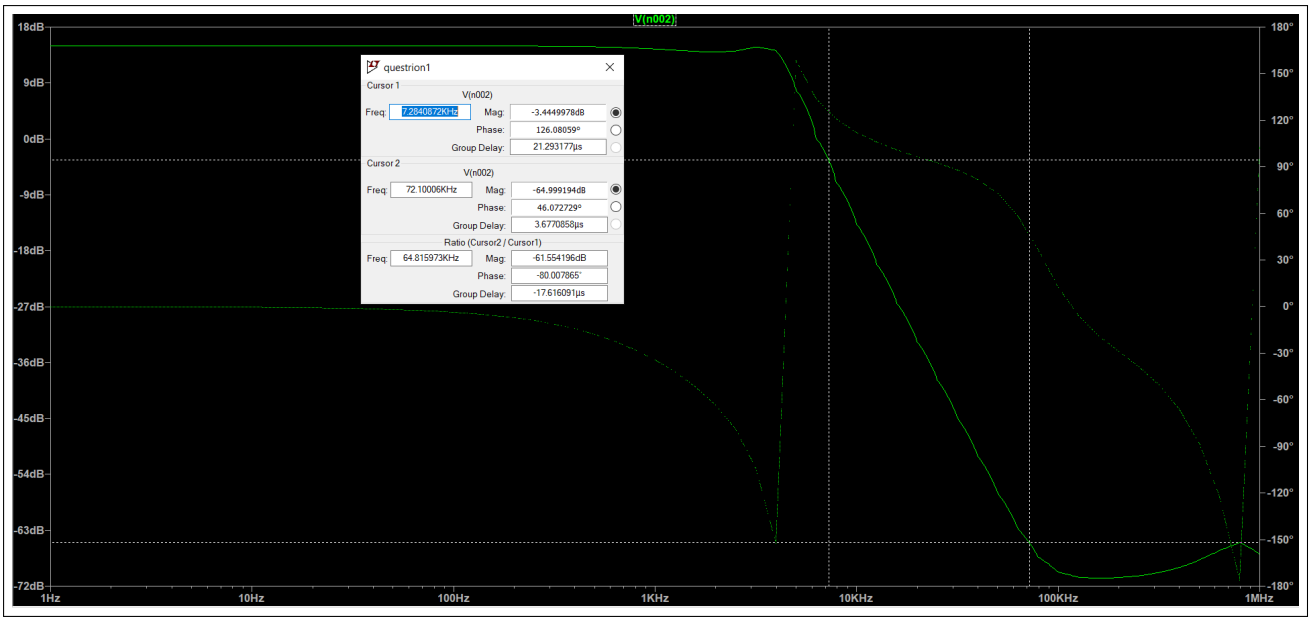

Figure 2.1.11: Decay rate of 60dB/decade

2.2 Butterworth high-pass filter

$$
\begin{aligned}
Butterworth &- \text{high-pass} \\
&- \text{cut off } 8KHz \\
&- 60dB/\text{decade}
\end{aligned}
$$

a)

$$
\begin{aligned}
S_{Ln} &= \frac{\omega_0}{S} \\
\omega_0 &= 2\pi(8000)rad/s \\
\omega_0 &= 16000\pi rad/s \\
\omega &= 2\pi f \\
n &= \frac{60}{20} \quad = 3rd\ order
\end{aligned}
$$

$$H_L(S) = \frac{1}{1 + 2\left(S_{Ln}\right) + 2\left(S_{Ln}\right)^2 + \left(S_{Ln}\right)^3}$$
$$H_L(S) = \frac{1}{1 + 2\left(\frac{\omega_0}{S}\right) + 2\left(\frac{\omega_0}{S}\right)^2 + \left(\frac{\omega_0}{S}\right)^3}$$
$$H_L(\omega) = \frac{1}{1 + 2\left(\frac{\omega_0}{j\omega}\right) + 2\left(\frac{\omega_0}{j\omega}\right)^2 + \left(\frac{\omega_0}{j\omega}\right)^3}$$
$$H_L(f) = \frac{1}{1 + 2\left(\frac{8\times10^3}{jf}\right) + 2\left(\frac{8\times10^3}{jf}\right)^2 + \left(\frac{8\times10^3}{jf}\right)^3}$$

b)

$$|H(f)| = \frac{1}{\sqrt{1 + \left(2\left(\frac{8\times10^3}{f}\right)\right)^2 + \left(2\left(\frac{8\times10^3}{f}\right)^2\right)^2 + \left(\left(\frac{8\times10^3}{f}\right)^3\right)^2}}$$
$$|H(f)| = \frac{1}{\sqrt{\left(1 - 2\left(\frac{8\times10^3}{f}\right)^2\right)^2 + \left(2\left(\frac{8\times10^3}{f}\right) - \left(\frac{8\times10^3}{f}\right)^3\right)^2}}$$

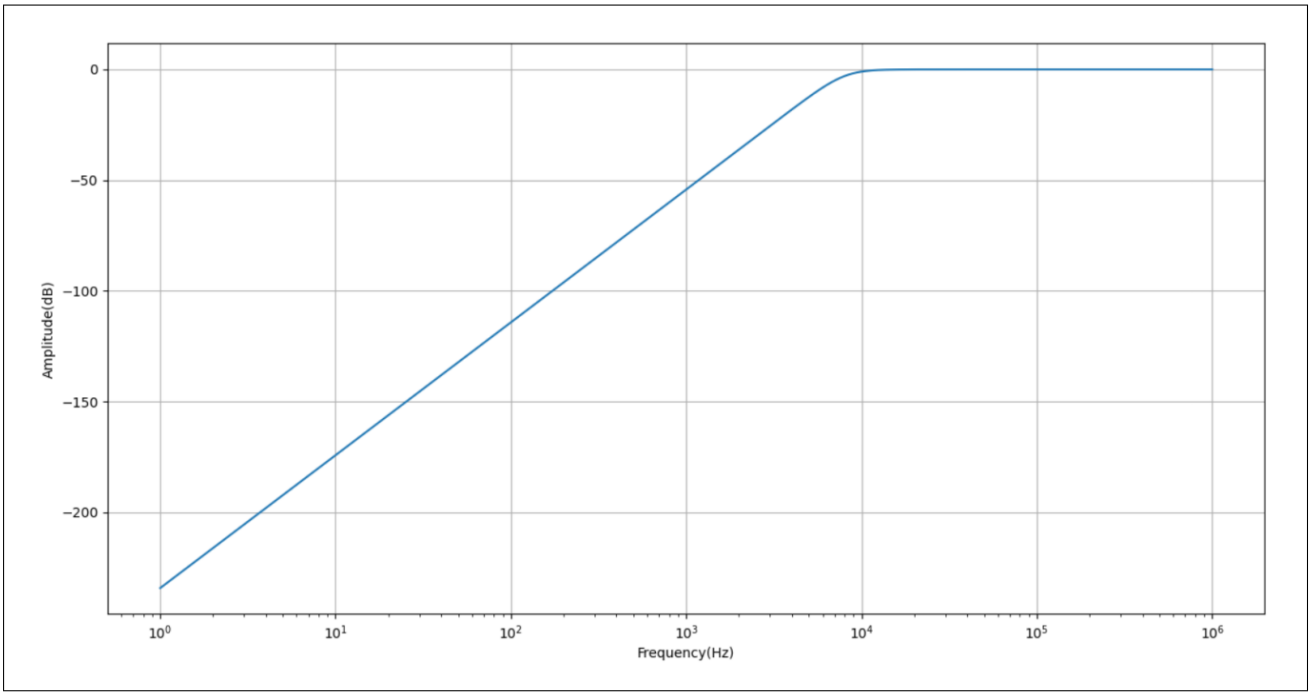

Figure 2.2.1: Amplitude of High pass Butterworth active filter

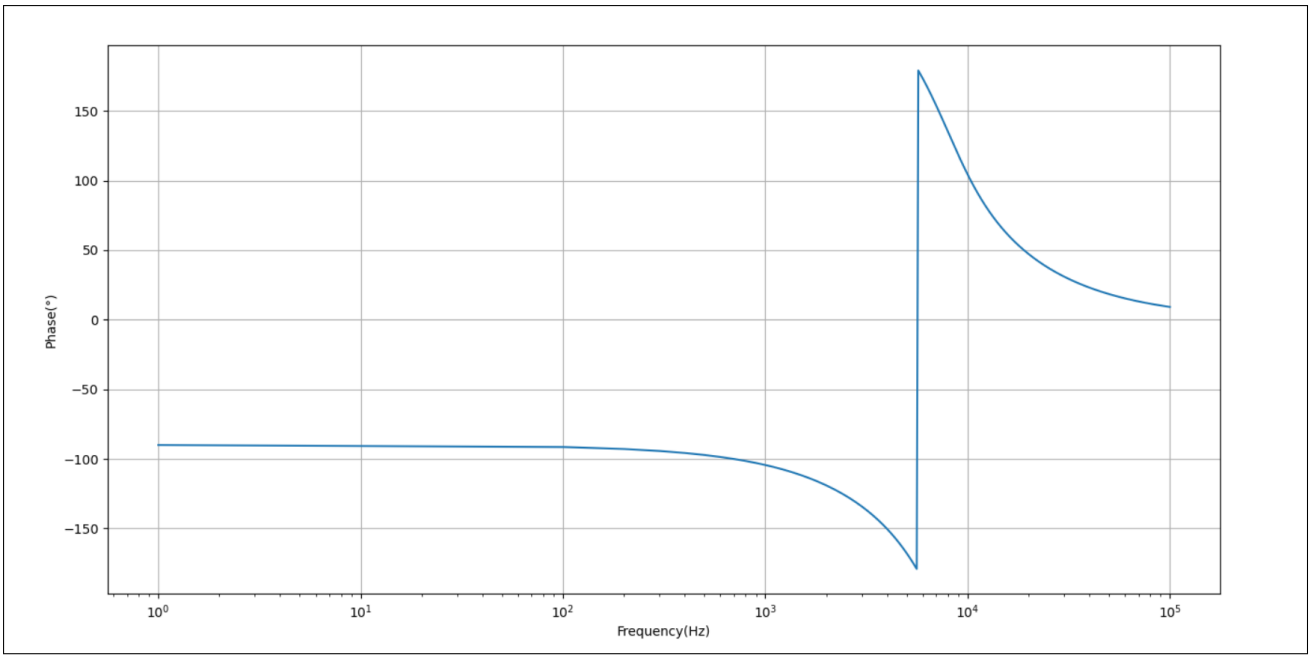

Figure 2.2.2: Phase response of high pass butterworth filter

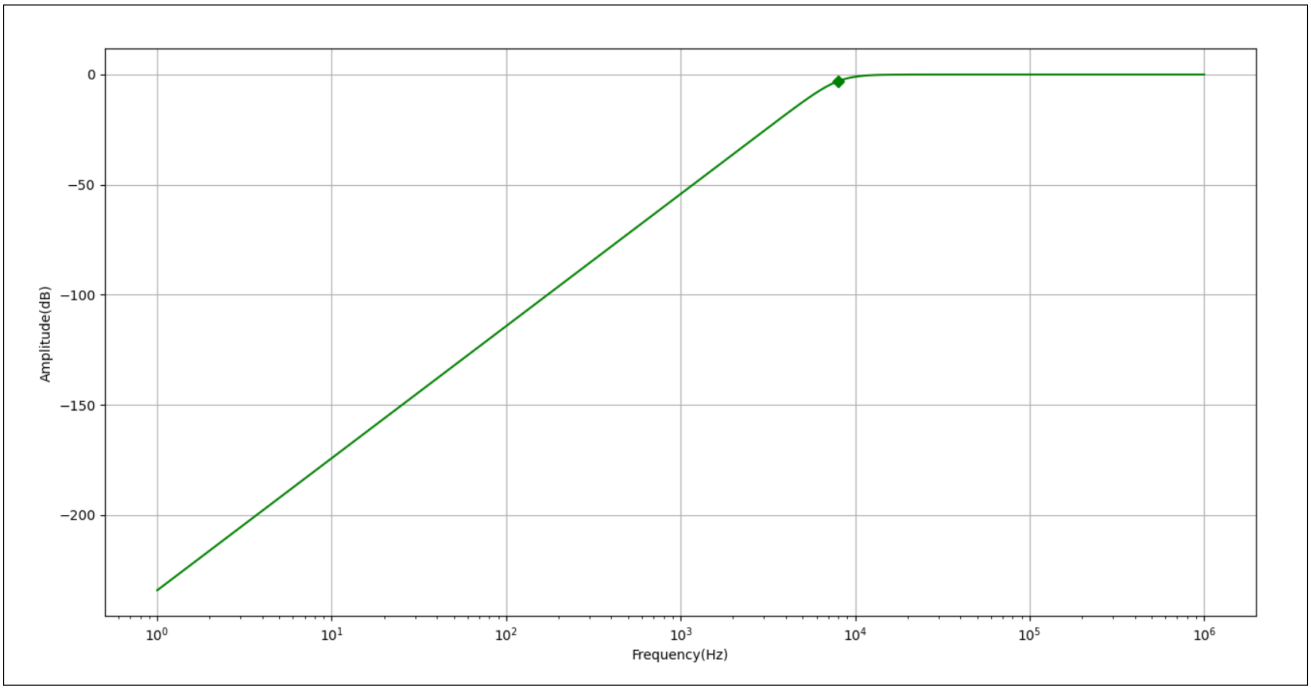

Figure 2.2.3: Amplitude with Cutoff frequency Fc of 8kHz

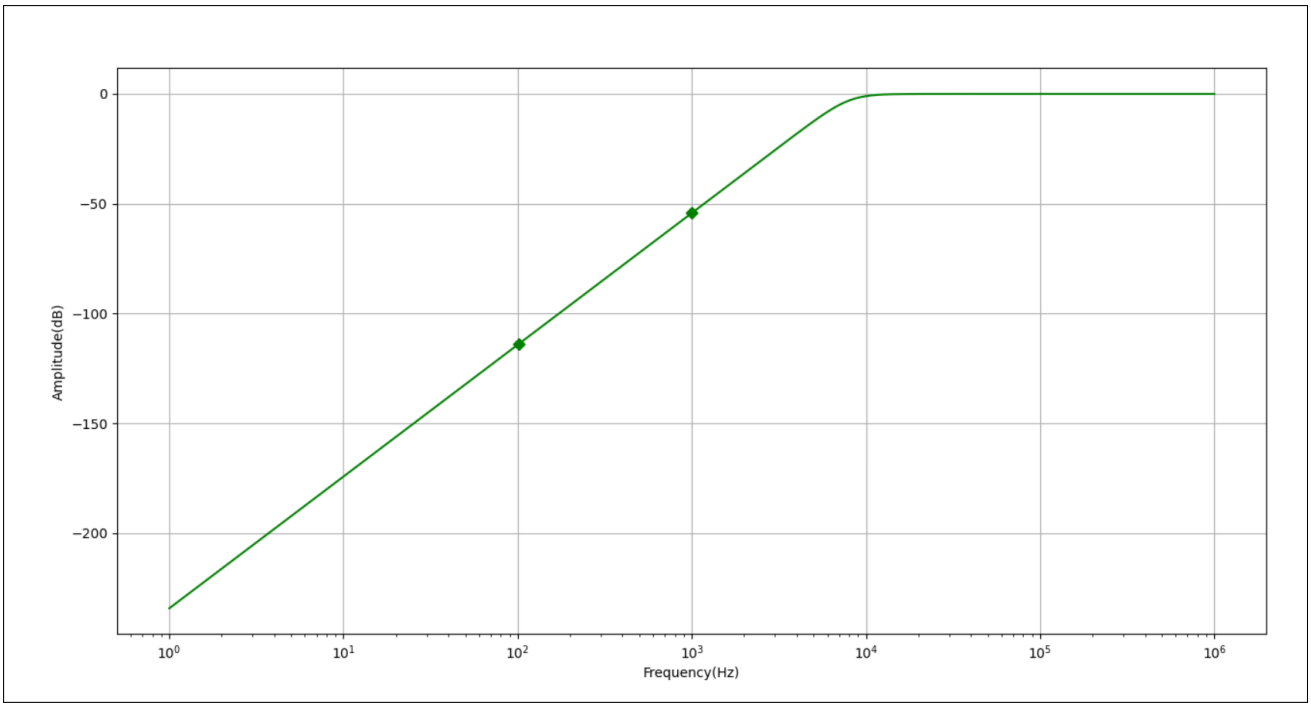

Figure 2.2.4: Amplitude with decay of 60dB/Decade

c)

$$H(S) = \frac{a_0}{(s^2 + l_0 S + q_{01}^2) \times (q_{11} + S)}$$
$$\therefore H(S) = \frac{1}{(s^2 + 1S + 1) \times (1 + S)}$$

$$q_{01} = 1$$
$$l_0 = \frac{q_{01}}{Q}$$
$$1 = \frac{1}{Q}$$
$$Q = 1$$

$$F_c = 8kHz$$
$$R_1 = R_2 = R$$
$$C_1 = C_2 = C$$

$$F_c = \frac{1}{2\pi\sqrt{R_1 C_1 R_2 C_2}}$$
$$= \frac{1}{2\pi RC}$$
$$\therefore R = \frac{1}{2\pi F_c C}$$

$$\text{use } c = 100nF$$

$$R = \frac{1}{2\pi(8 \times 10^3)(100 \times 10^{-9}}$$

$$R = 198.94\Omega$$

$$\therefore R_1 = R_2 = R_5 = 198.94\Omega$$
$$\therefore C_1 = C_2 = C_5 = 100nF$$

$$\frac{V_0}{V_{in}} = \frac{kS^2}{S^2 + S\left[\frac{R_1C_1+R_2C_2+R_1C_1(1-k)}{R_1C_1R_2C_2}\right] + \frac{1}{R_1C_1R_2C_2}}$$
$$\frac{V_0}{V_{in}} = \frac{kS^2}{S^2 + S\omega_0\left[3-k\right] + \omega_0^2}$$

thus for third order Butterworth :

$$Q = 1 = \frac{1}{3-k}$$

k can never be bigger that 3 as circuit will then become unstable.

$$\frac{1}{3-k} = 1 \text{ k is gain}$$
$$k = 2$$
$$k = 1 + \frac{R_3}{R_4}$$
$$2 = 1 + \frac{R_3}{R_4}$$
$$1 = \frac{R_3}{R_4}$$
$$\therefore R_3 = R_4$$

$$\text{Use } R_3 \text{ as } 10k\Omega$$
$$\therefore R_4 = 10k\Omega$$

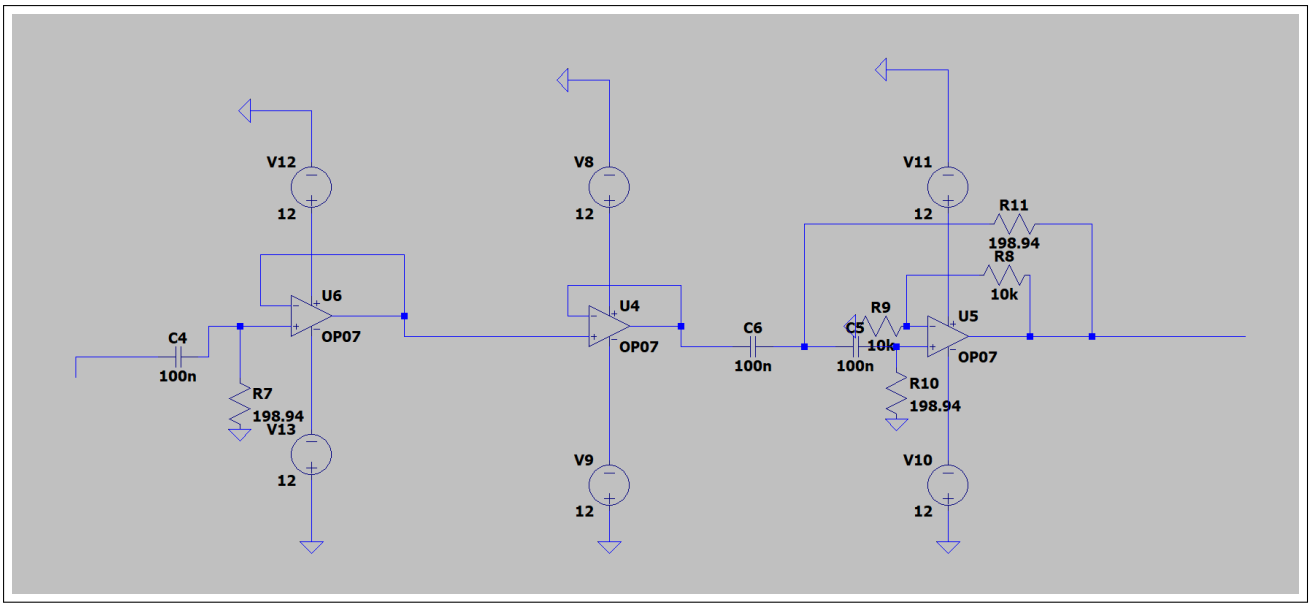

Figure 2.2.5: Circuit design

d)

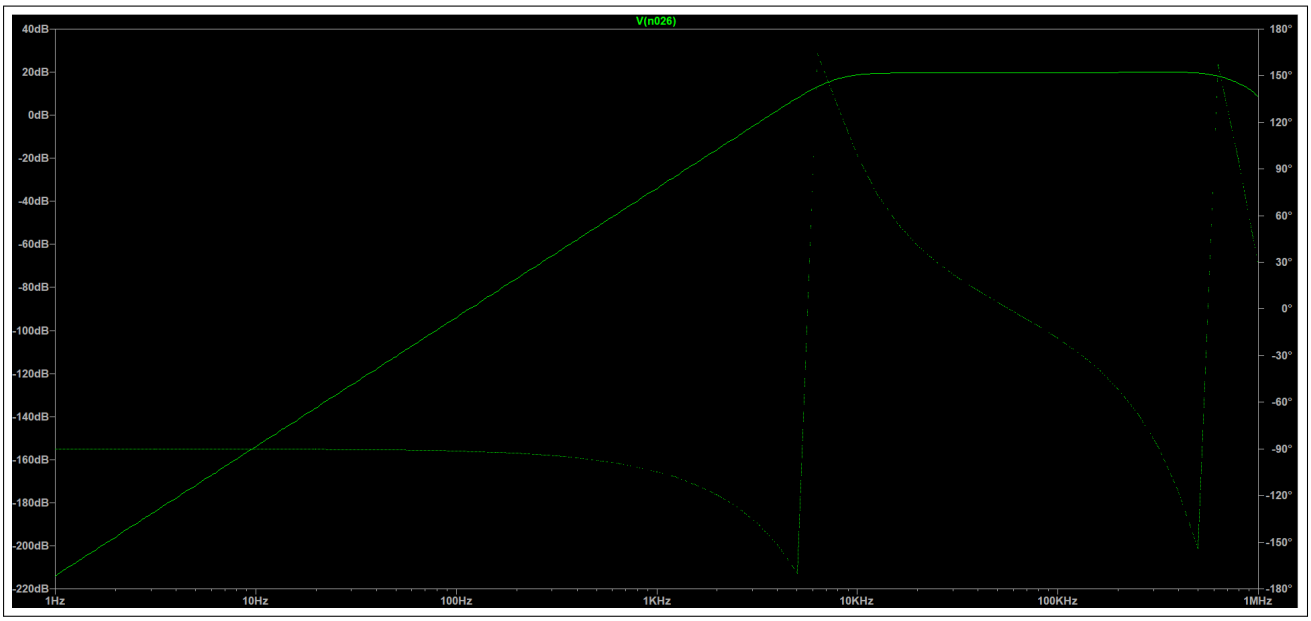

Figure 2.2.6: Amplitude and phase response of High pass Butterworth filter

e)

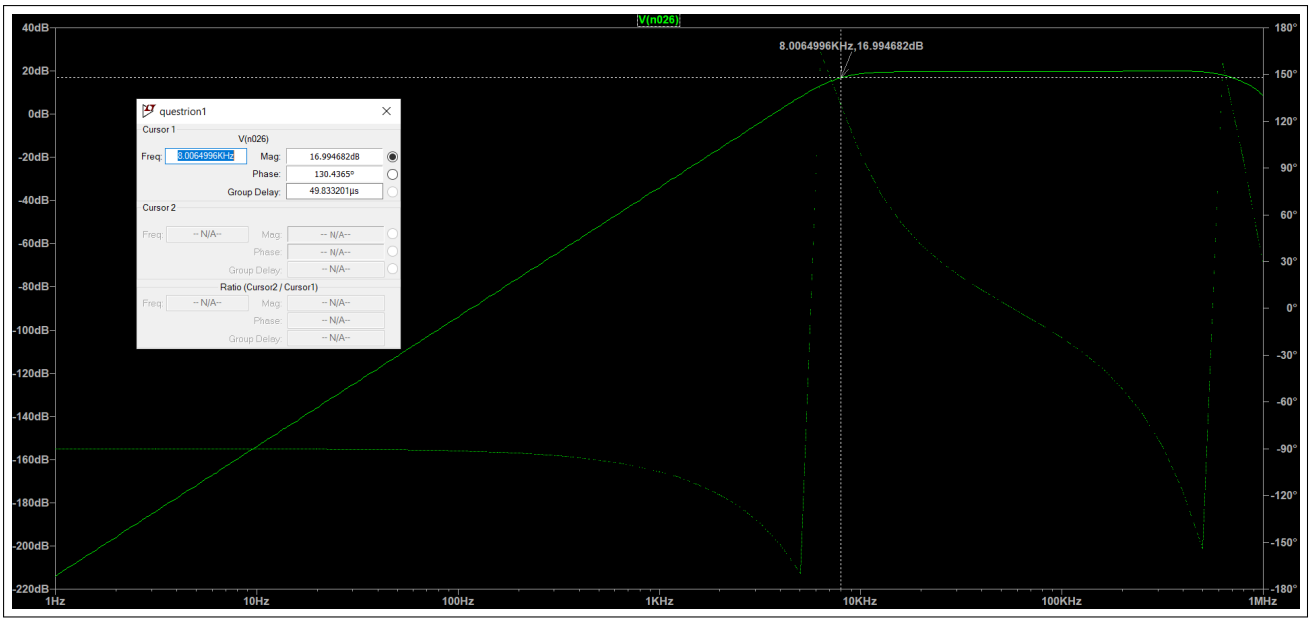

Figure 2.2.7: Simulation showing cut off frequency of 8kHz

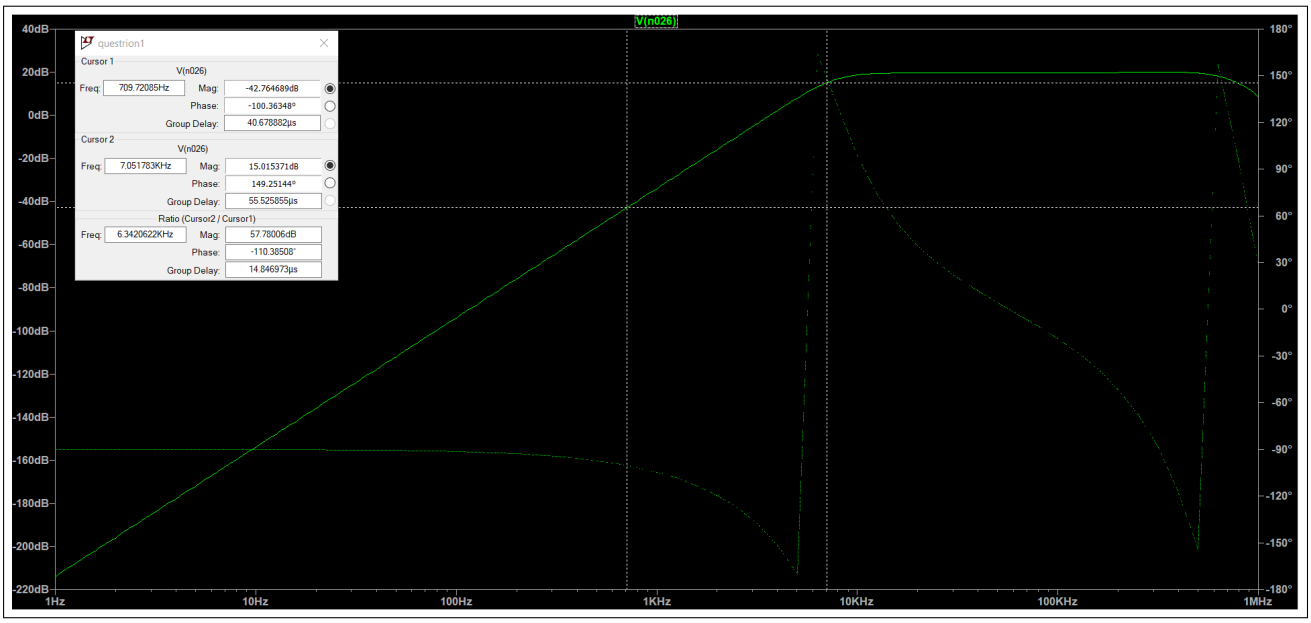

Figure 2.2.8: Ampitude simulation with decay rate of 60dB

2.3 Minimal ripple band-pass filter

Use Butterworthas there are minimal ripples.
range : 8kHz to 80kHz
decay rate of 40dB/decade
$n = \frac{10}{20=2}$
$\therefore$ second order.

a)

$$S_{LN} = \frac{S^2 + \omega_1\omega_2}{S(\omega_2 - \omega_1)}$$

$$\omega_1 = 16000\pi$$
$$\omega_2 = 160000\pi$$

$$\begin{aligned}
S_{LN} &= \frac{S^2 + (16000\pi)(160000\pi)}{S(160000 - 16000)\pi} \\
S_{LN} &= \frac{S^2 + (2560 \times 10^6\pi^2)}{S(144 \times 10^3\pi)} \\
S_{LN} &= \frac{S^2}{S(144 \times 10^3\pi)} + \frac{2560 \times 10^6\pi}{S(144 \times 10^3)} \\
S_{LN} &= \frac{S}{144 \times 10^3\pi} + \frac{17777.78\pi}{S} \\
j\omega_{LN} &= \frac{j\omega}{144 \times 10^3\pi} + \frac{17777.78\pi}{j\omega} \\
F_{LN} &= \frac{j2\omega}{144 \times 10^3} + \frac{17777.78}{j2\omega} \\
f_{LN} &= \frac{jf}{72 \times 10^3} + \frac{8888.89}{jf}
\end{aligned}$$

$$\begin{aligned}
H(S) &= \frac{1}{1 + 1.4142S + S^2} \\
H(s) &= \frac{1}{1 + 1.4142\left(\frac{jf}{70\times10^3} + \frac{8888.89}{jf}\right) + \left(\frac{jf}{72\times10^3} + \frac{8888.89}{jf}\right)^2} \\
H(s) &= \frac{1}{1 + 1.4142j\left(\frac{f}{70\times10^3} - \frac{8888.89}{f}\right) - \left(\frac{f}{72\times10^3} - \frac{8888.89}{f}\right)^2}
\end{aligned}$$

b)

$$|H(S)| = \frac{1}{\sqrt{1 - \left(\left(\frac{f}{72\times10^3} - \frac{8888.89}{f}\right)^2\right)^2 + \left(1.4142\left(\frac{f}{72\times10^3} - \frac{8888.89}{f}\right)\right)^2}}$$

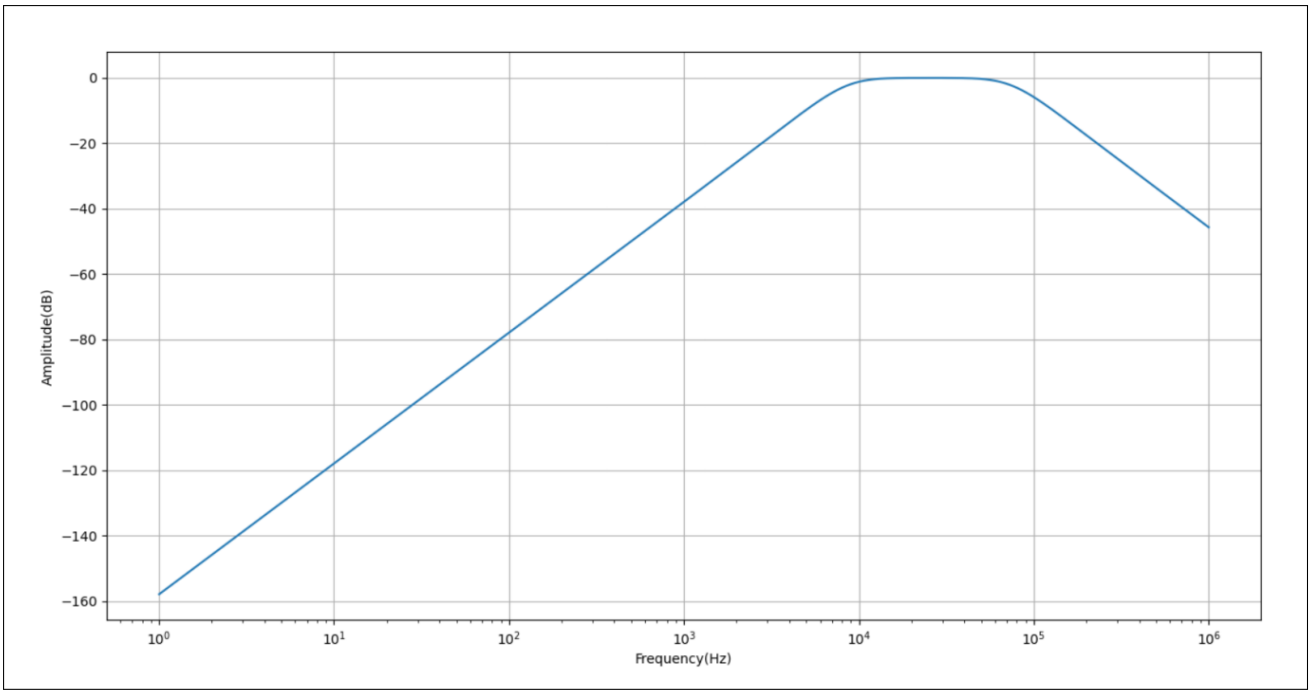

Figure 2.3.1: Amplitude of minimal ripple pass band filter

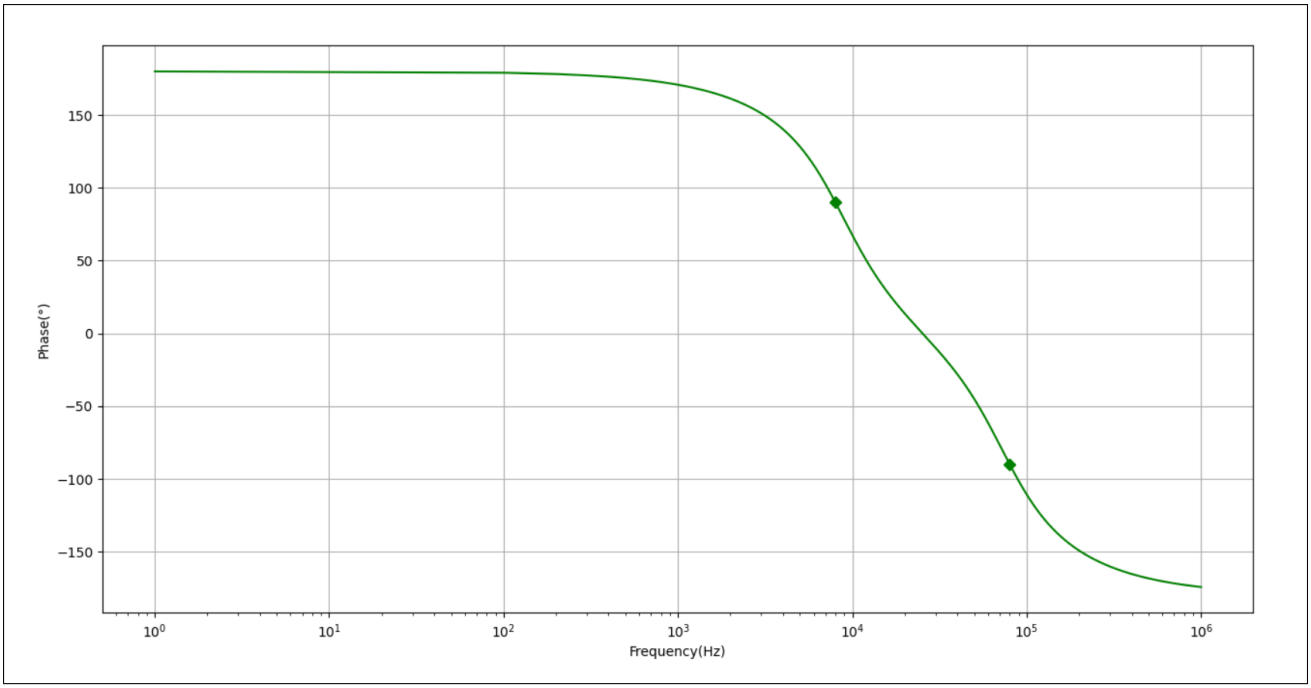

Figure 2.3.2: Phase response of passband between 8kHz and 80kHz

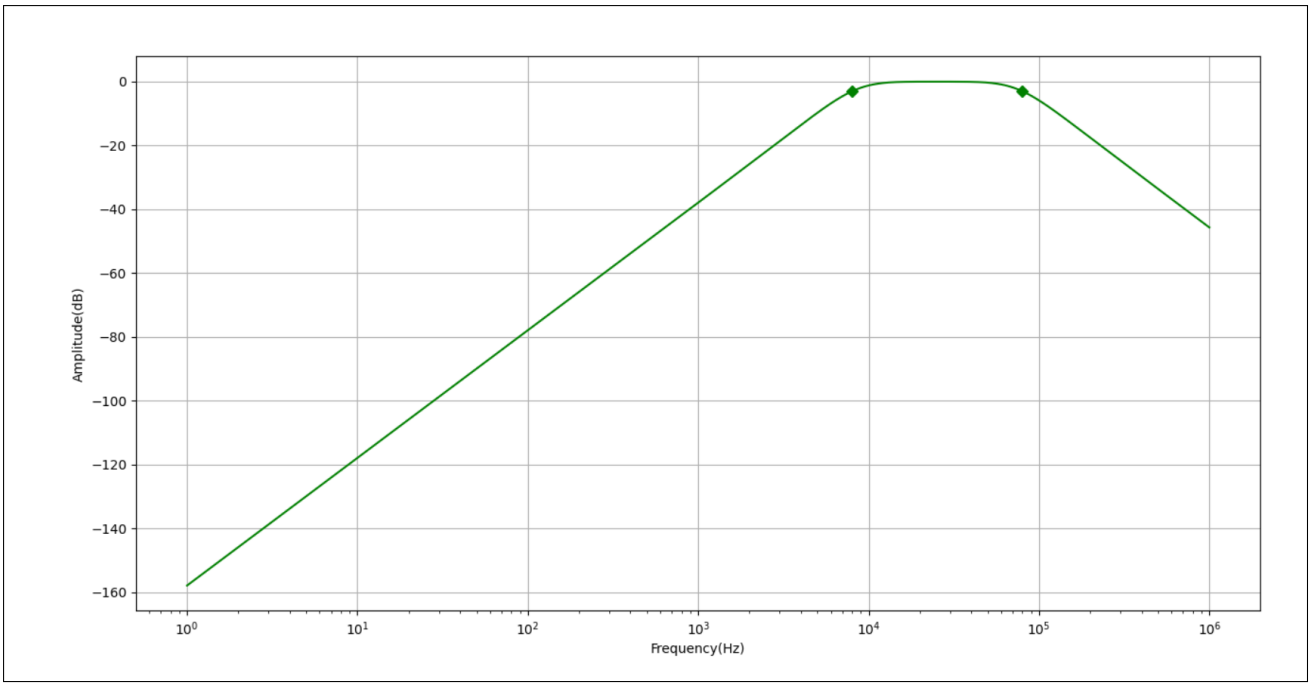

Figure 2.3.3: Amplitude with PassBand between 8kHz and 80kHz

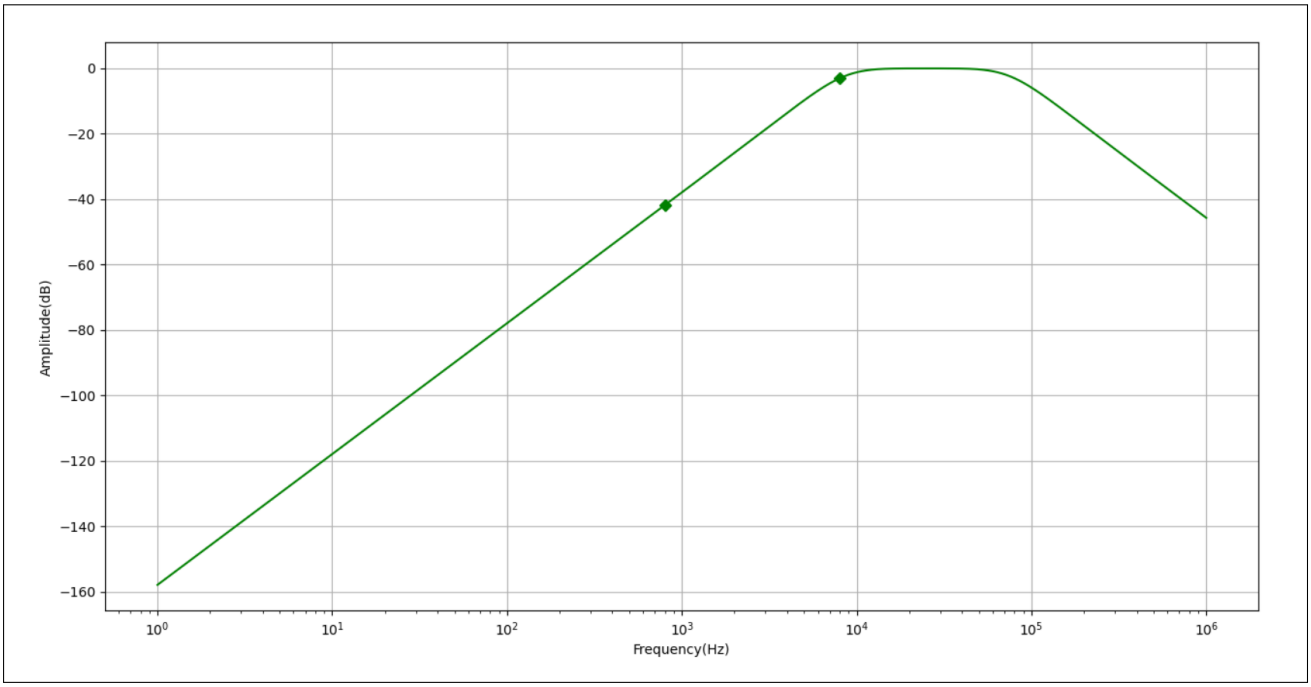

Figure 2.3.4: Amplitude with decay rate of 40 dB/decade

c) Inverting op amp circuit topology will be used for the circuit design of a band pass with minimum ripples.

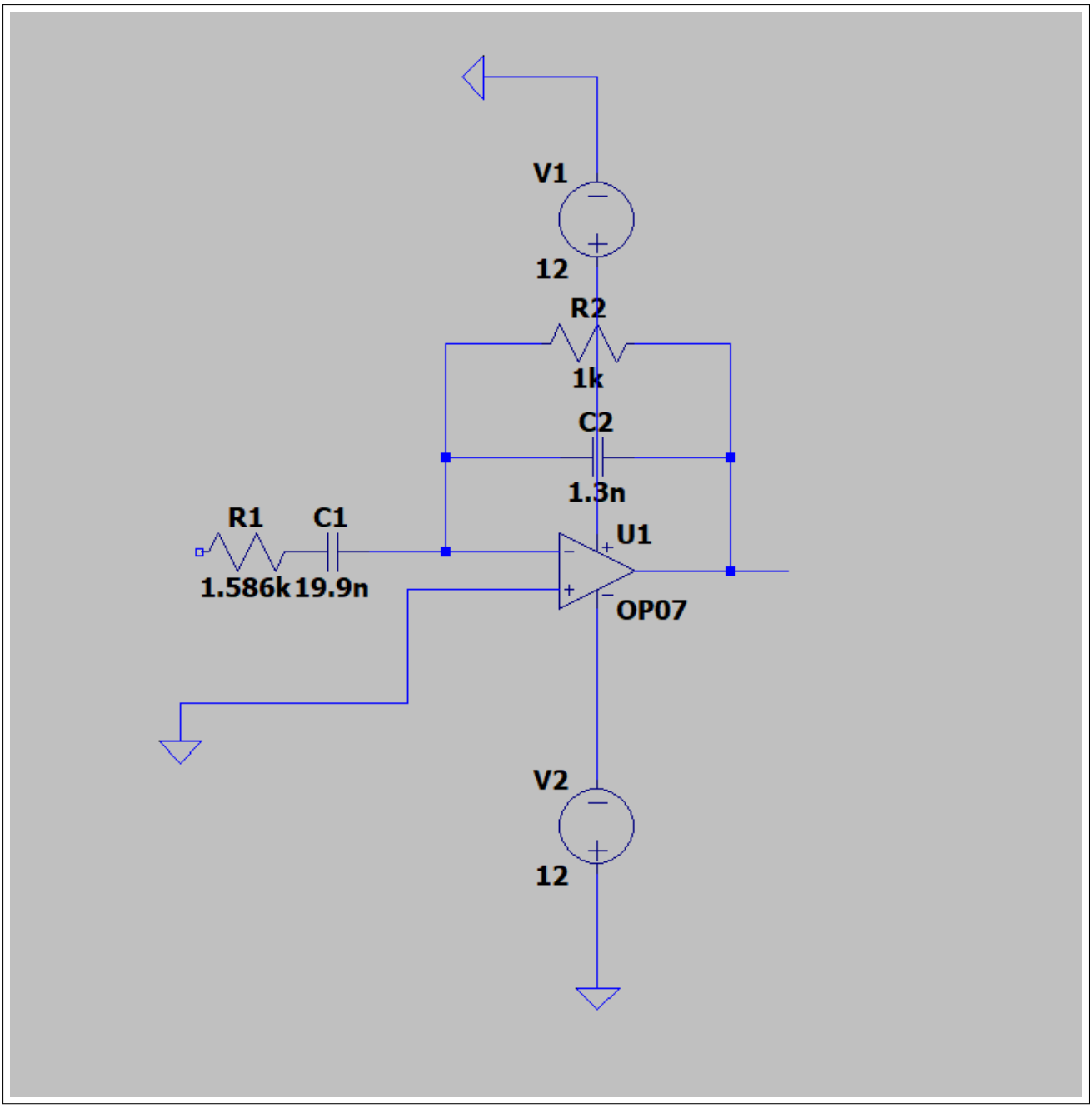

Figure 2.3.5: Active inverted op-amp topology

for 8kHz we need a high-pass active filter.

$$H(S) = \frac{a_0}{(S^2 + 1.4142S + 1)}$$

$$l_0 = \frac{q_{01}}{Q}$$
$$1.4142 = \frac{1}{Q}$$
$$Q = 0.707$$

$$\frac{V_0}{V_{in}} = \frac{L\omega_n^2}{S^2 + S\frac{1}{Q}\omega_n + \omega_n^2}$$
$$= \frac{\frac{1}{R_1C_1R_2C_2}}{S^2 + S\left[\frac{R_1C_1+R_2C_2}{R_1C_1R_2C_2}\right] + \frac{1}{R_1C_1R_2C_2}}$$

Calculate the low cut off frequency.

$$f_c = \frac{1}{2\pi R_2 C_2}$$

Take R_2 as $1k\Omega$

$$C_2 = \frac{1}{2\pi f R}$$
$$C_2 = \frac{1}{2\pi(8000)(1000)}$$
$$C_2 = 19.89nF$$

from:

$$\frac{V_0}{V_{in}} = \frac{k\omega^2}{S^2 + S\omega_C(3-k) + \omega_0^2}$$

We can say:

$$Q = \frac{1}{3-k}$$
$$0.707 = \frac{1}{3-k}$$
$$1.414 = 3 - k$$
$$k = 1.586 = Gain$$

Let $R_2 = 1000$

$$Gain = 1.586 = \frac{R_1}{1000}$$
$$R_1 = 1.586k\Omega$$

For high cut off frequency:

$$
\begin{aligned}
F_C &= \frac{1}{2\pi R_1 C_1} \\
&= \frac{1}{2\pi R_1 F} \\
&= \frac{1}{2\pi(80000)(1.586 \times 10^{-9})} \\
&= 1.25nF
\end{aligned}
$$

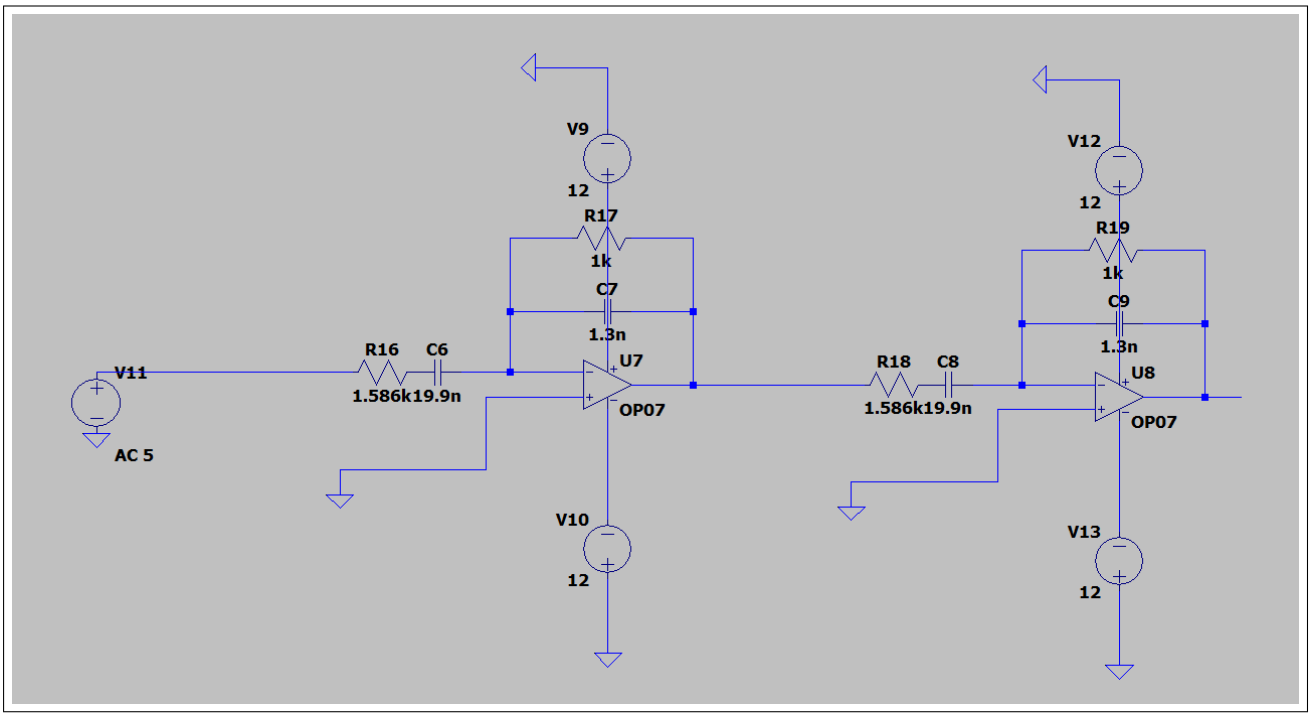

Figure 2.3.6: circuit design

d)

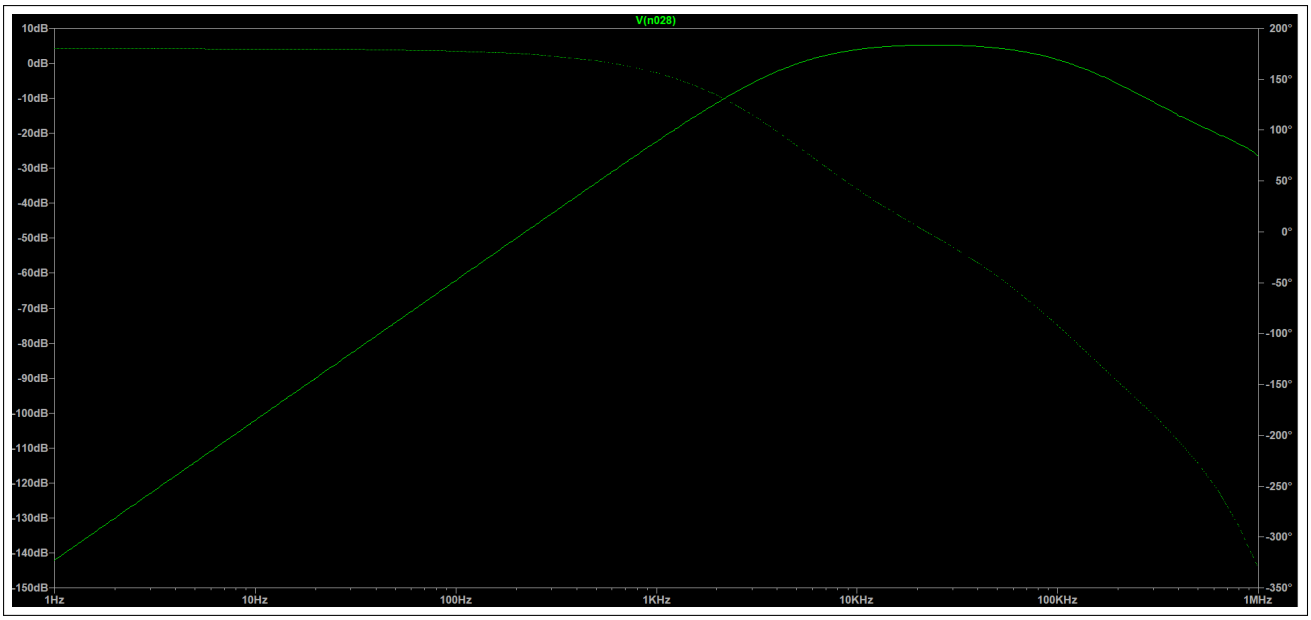

Figure 2.3.7: Frequency sweep with amplitude and phase response of minimal-ripple passband

e)

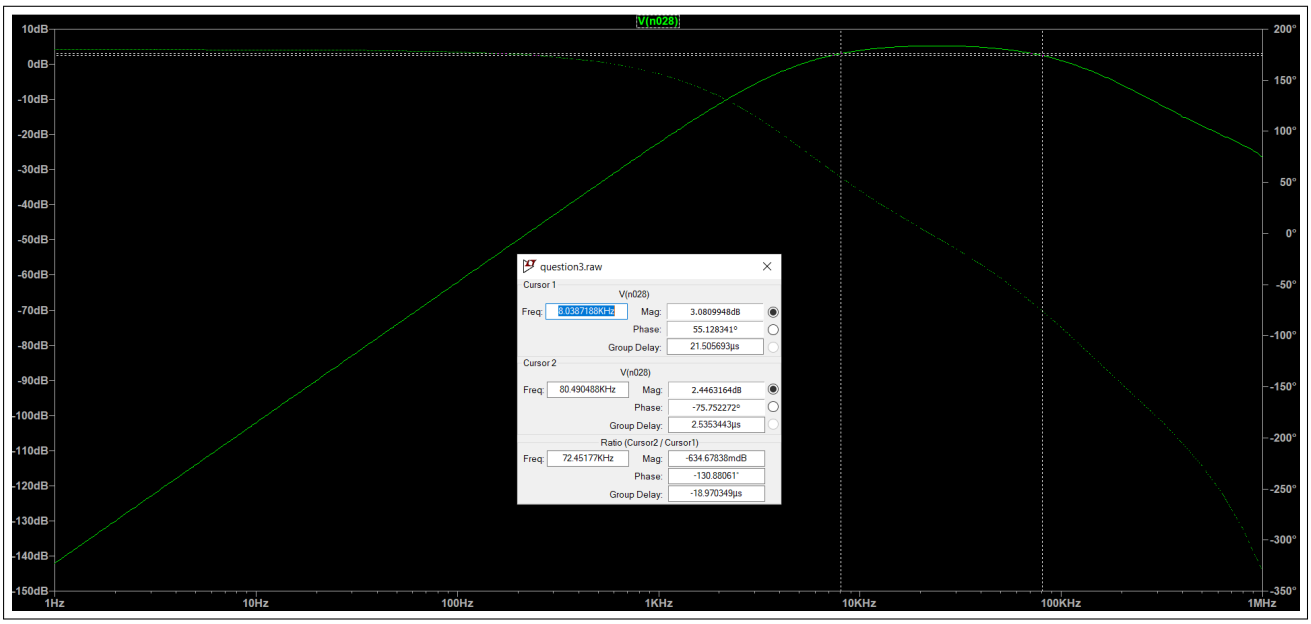

Figure 2.3.8: Amplitude simulation with passband between 8kHz and 80kHz

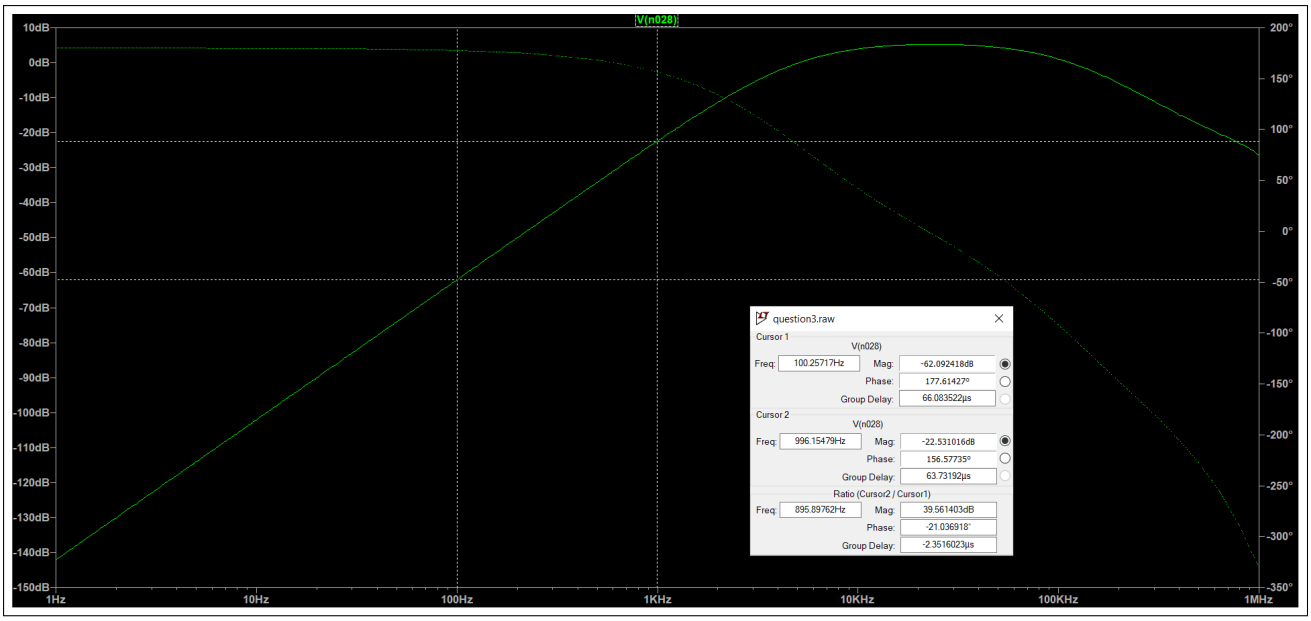

Figure 2.3.9: Amplitude simulation with decay rate of 40 dB/decade

3 Practical Results

3.1 Chebyshev low-pass filter

a)

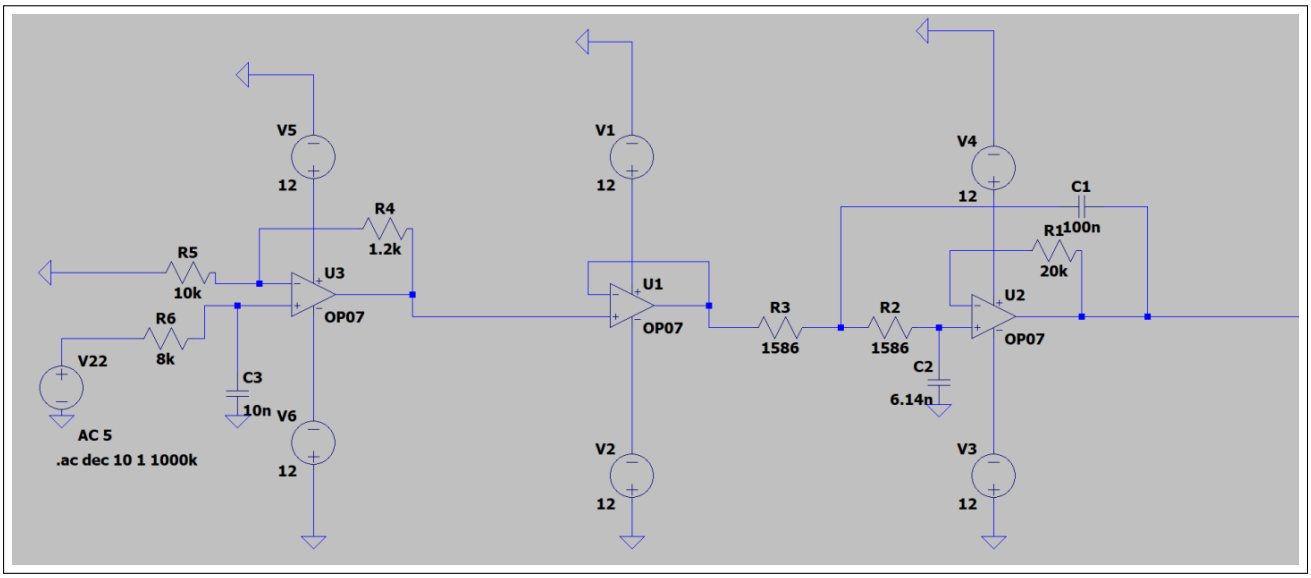

Figure 3.1.1: Circuit Design of Chebyshev low-pass filter

b)

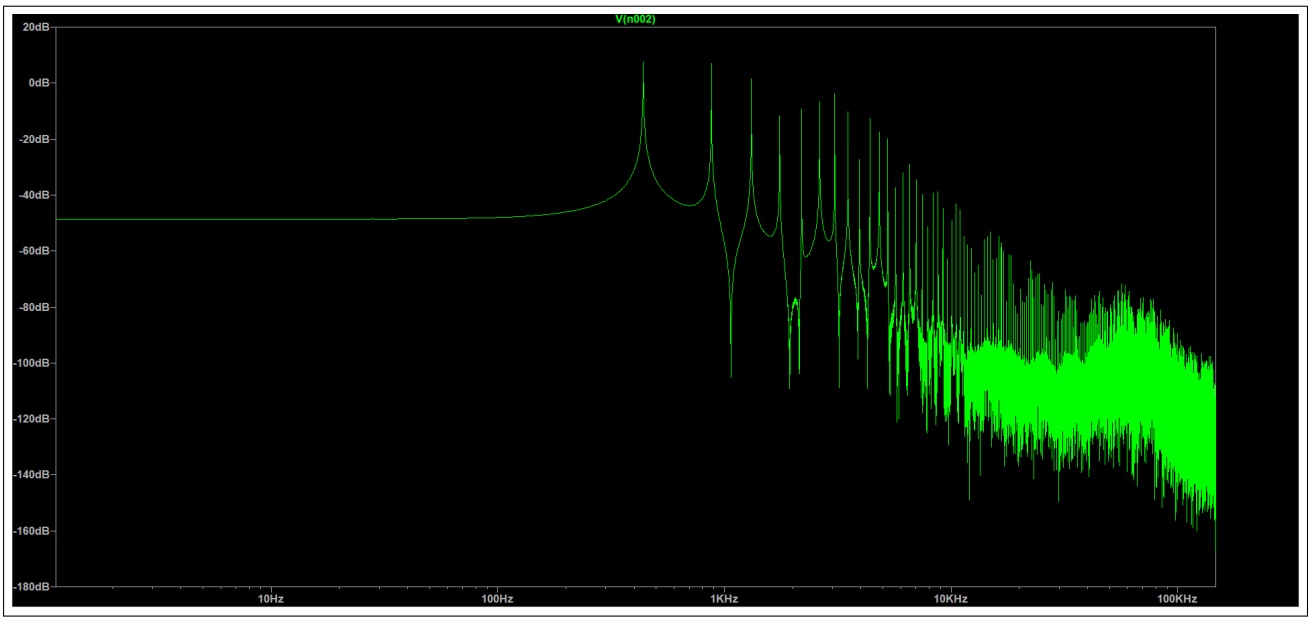

Figure 3.1.2: Frequency sweep with signal generator Chebyshev low-pass filter

c)

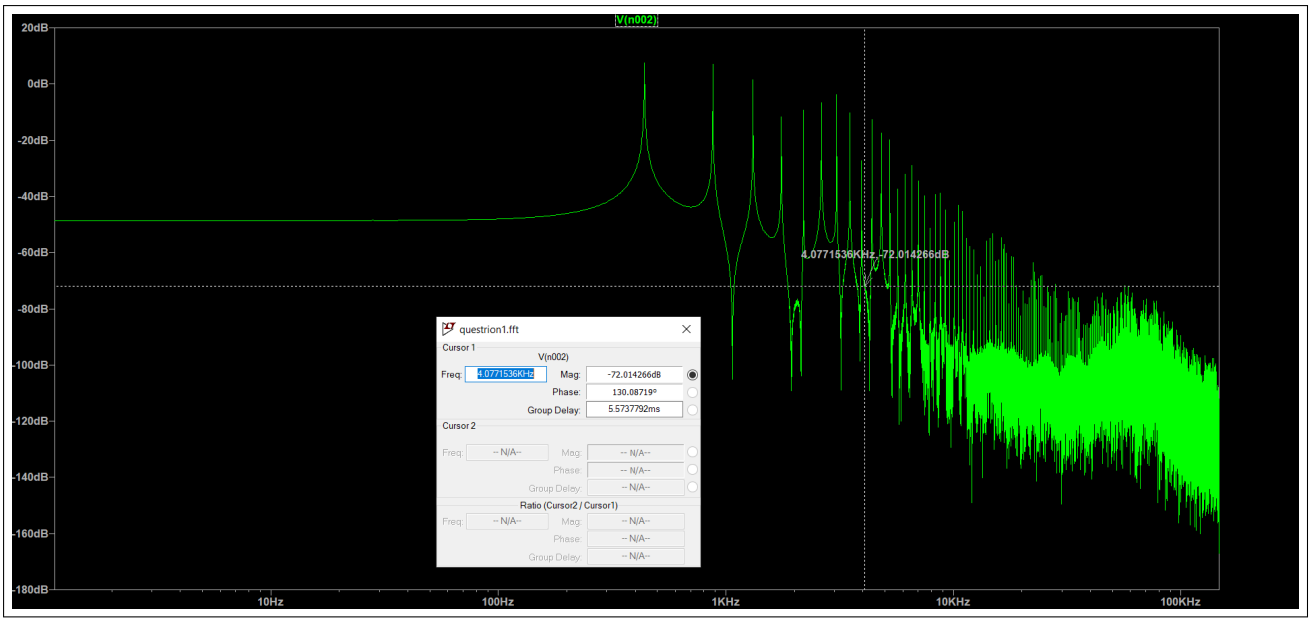

Figure 3.1.3: Chebyshev low pass filter with cutt of frequency at 4kHz

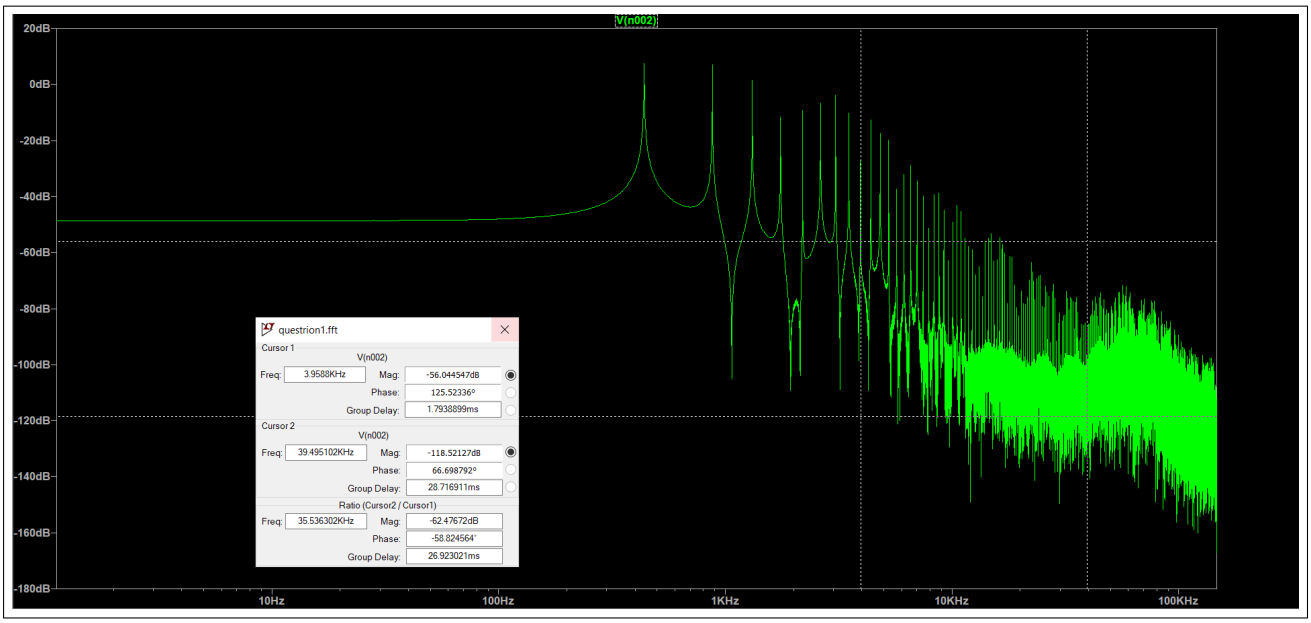

Figure 3.1.4: Chebyshev low pass filter with decay of 60db/decade

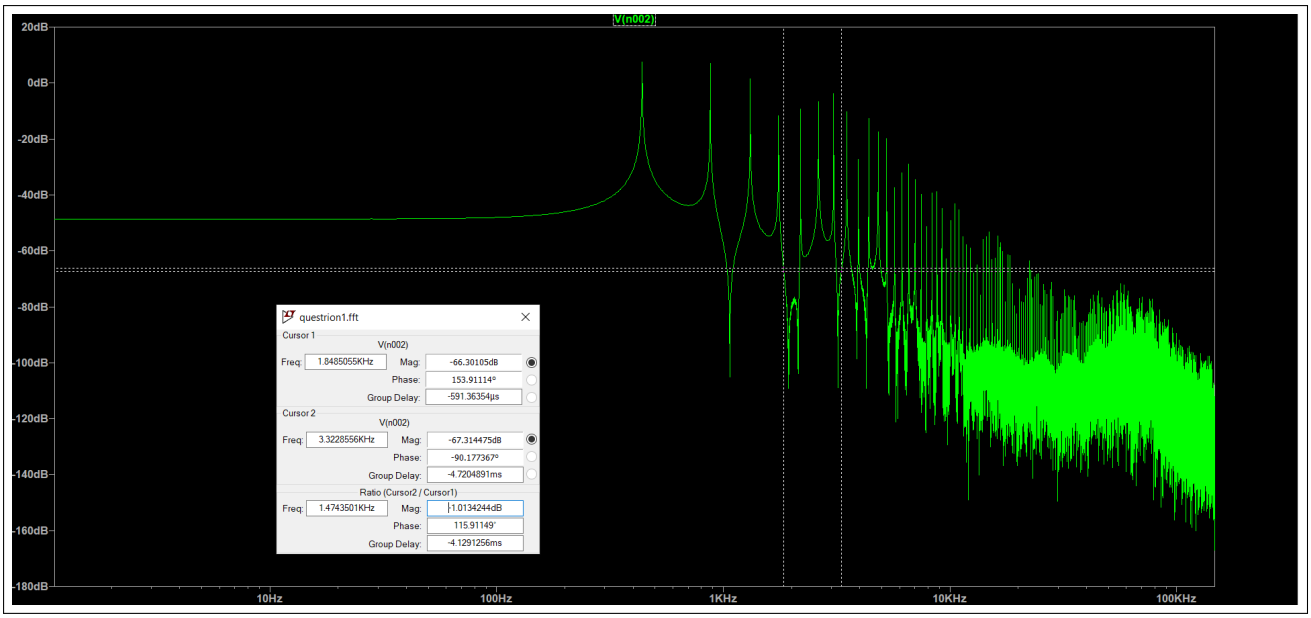

Figure 3.1.5: Chebyshev with ripple of 1 dB

d)

For the Chebyshev simulation without the use of the signal generator the cut of frequency Fc is easily observed. With the signal generator the general pattern of where the cut off frequency should be can be seen but not easily observed. Without the signal generator the ripple is easy to see and observe where it is and the size of the ripple. With the signal generator no ripple can be observed as the oscillation's cause by the signal generator make it hard to see where a ripple would be. The decay rate of the signal can still be seen and is the same in both the theory and the experiment.

3.2 Butterworth high-pass filter

a)

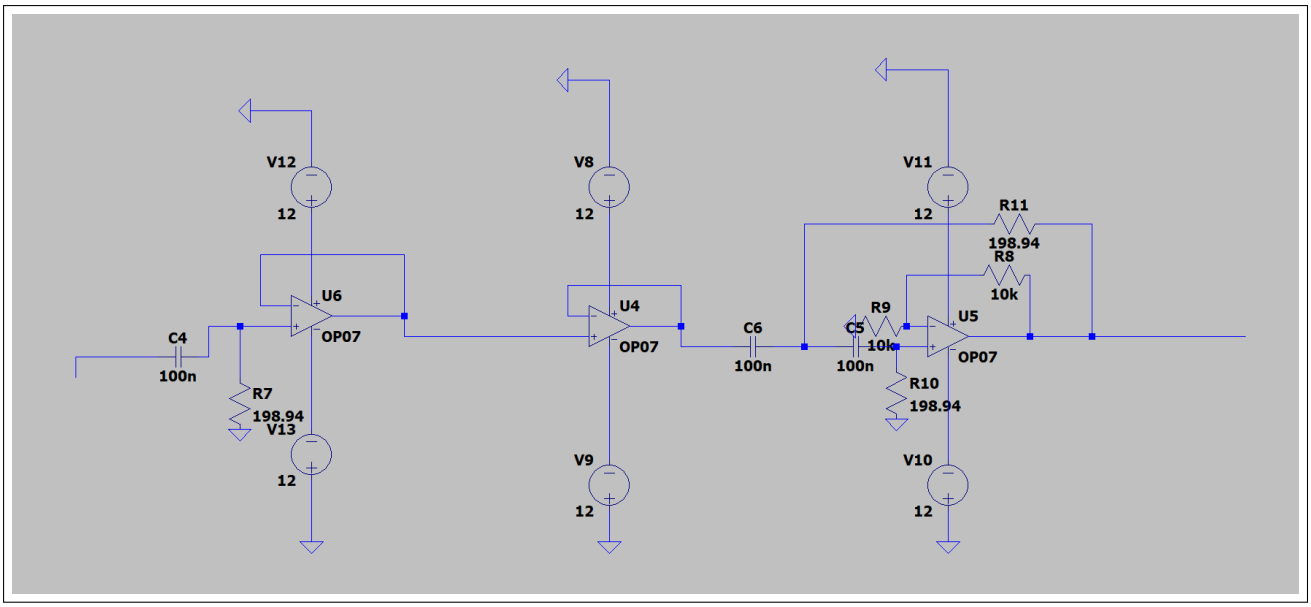

Figure 3.2.1: Circuit Design of Butterworth high-pass filter

b)

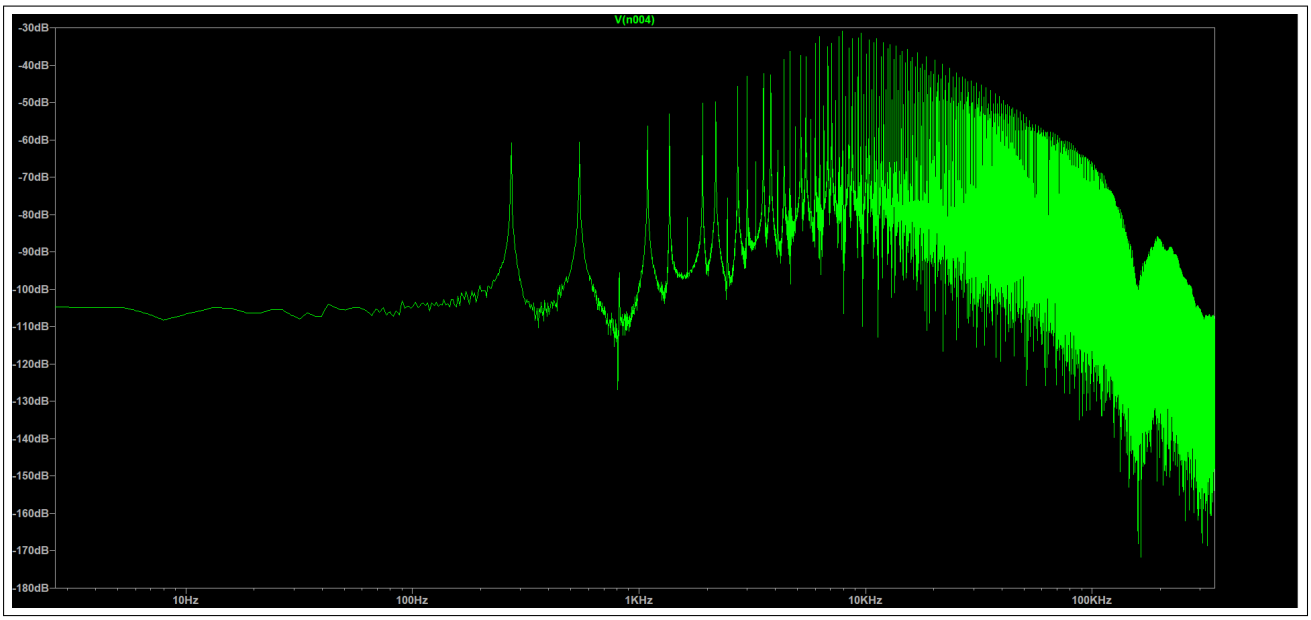

Figure 3.2.2: Frequency sweep of high pass butterworth filter

c)

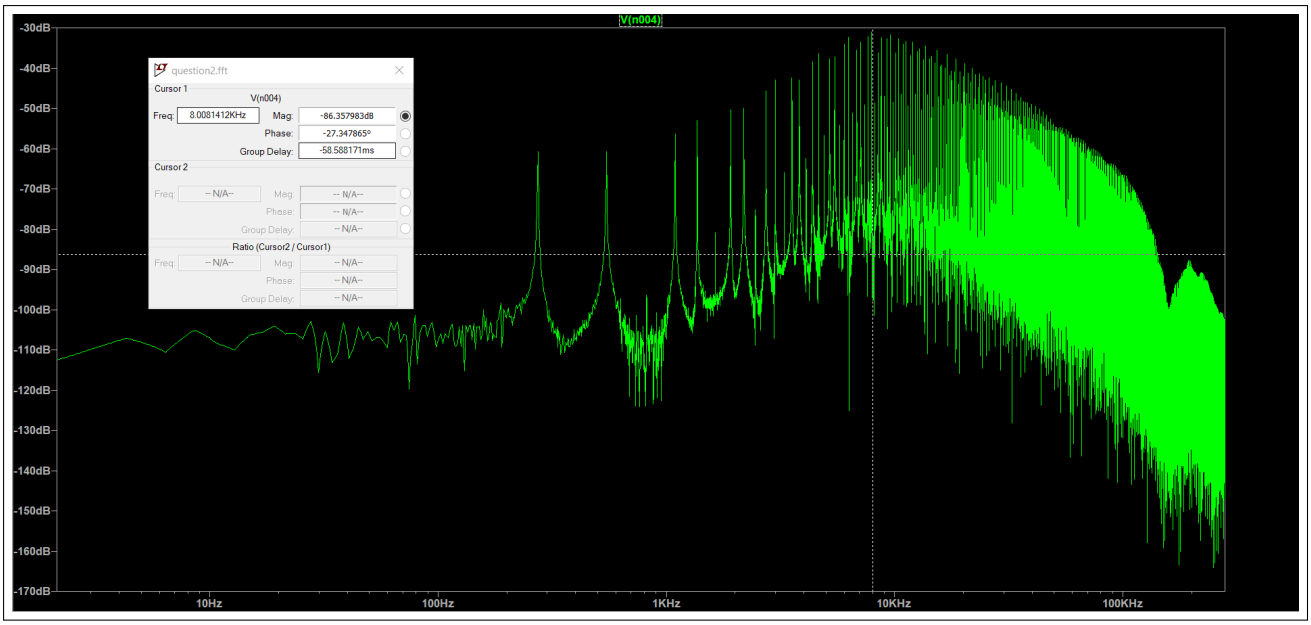

Figure 3.2.3: High pass filter with Fc at 8kHz

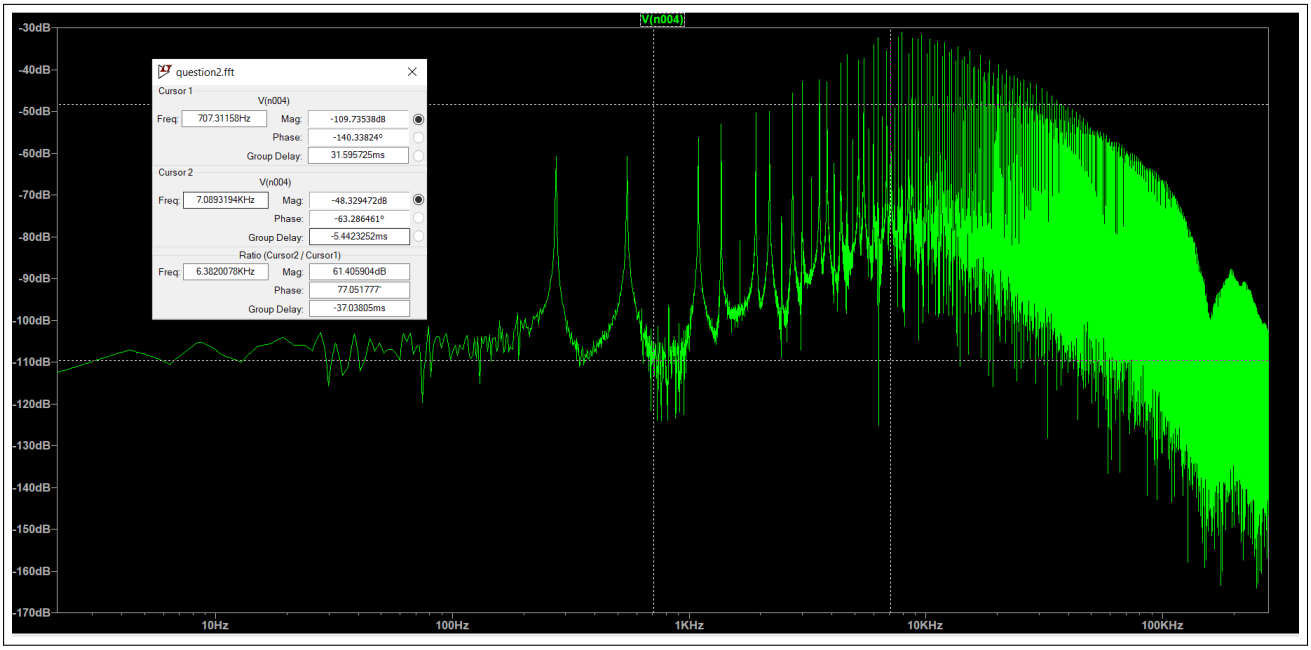

Figure 3.2.4: High pass Filter with decay of 60dB/decade

d)

For the butterwort high pass frequency there is a big difference in the general shape between the experimental results and the theoretical results that can be observed. The shape after the cut off frequency has a much different shape in the signal generator simulation as the amplitude drops after the decay rate where it does not happen in the theoretical. The decay rate can still easily be observed in both the figures of the experimental and the theoretical results.

3.3 Minimal ripple band-pass filter

a)

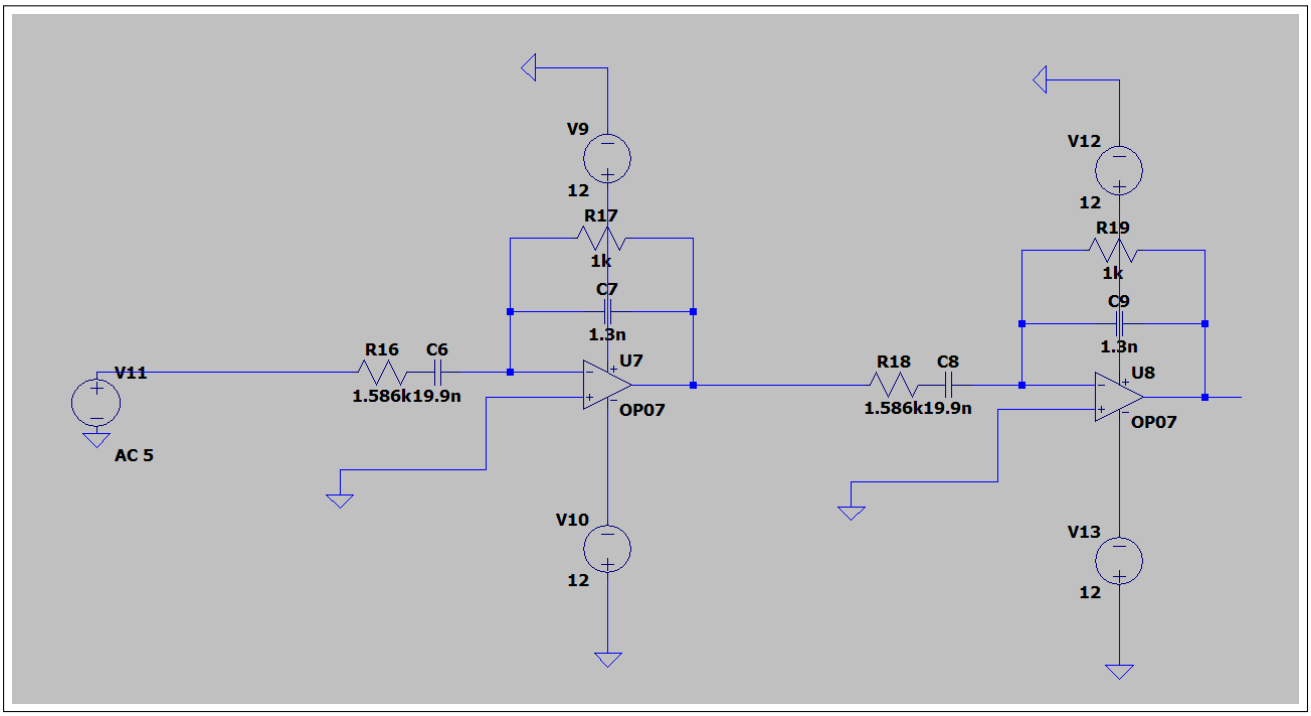

Figure 3.3.1: Circuit Design of Minimal ripple band-pass filter

b)

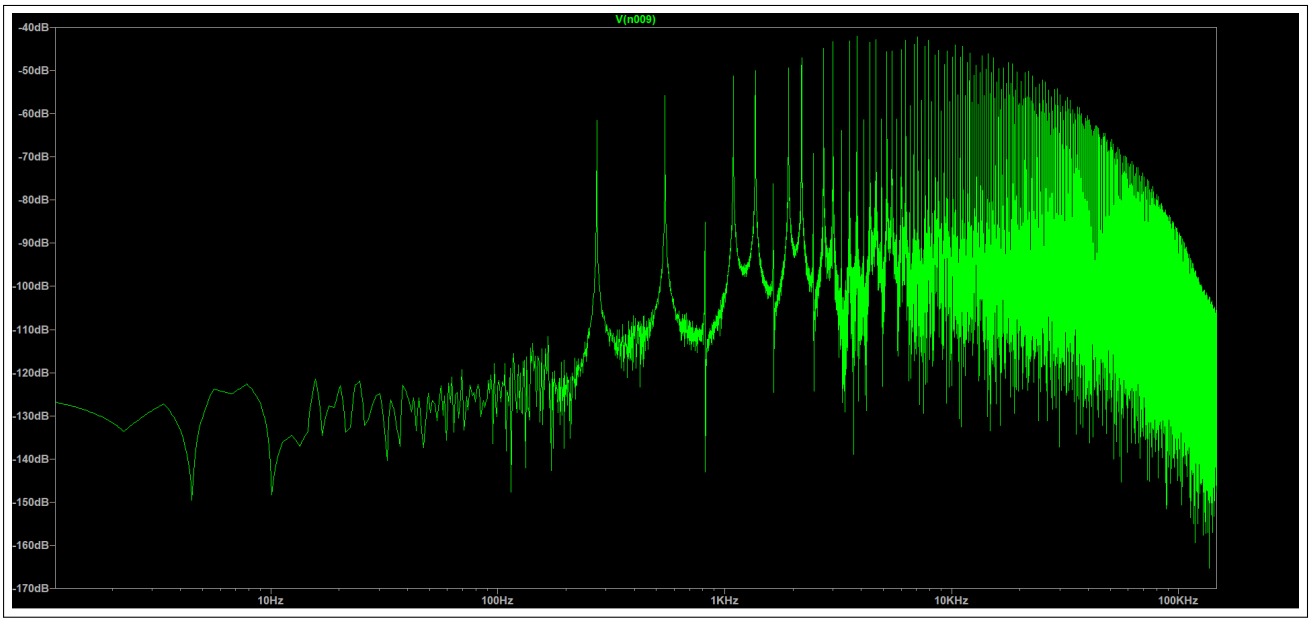

Figure 3.3.2: Frequency sweep of minimal ripple

c)

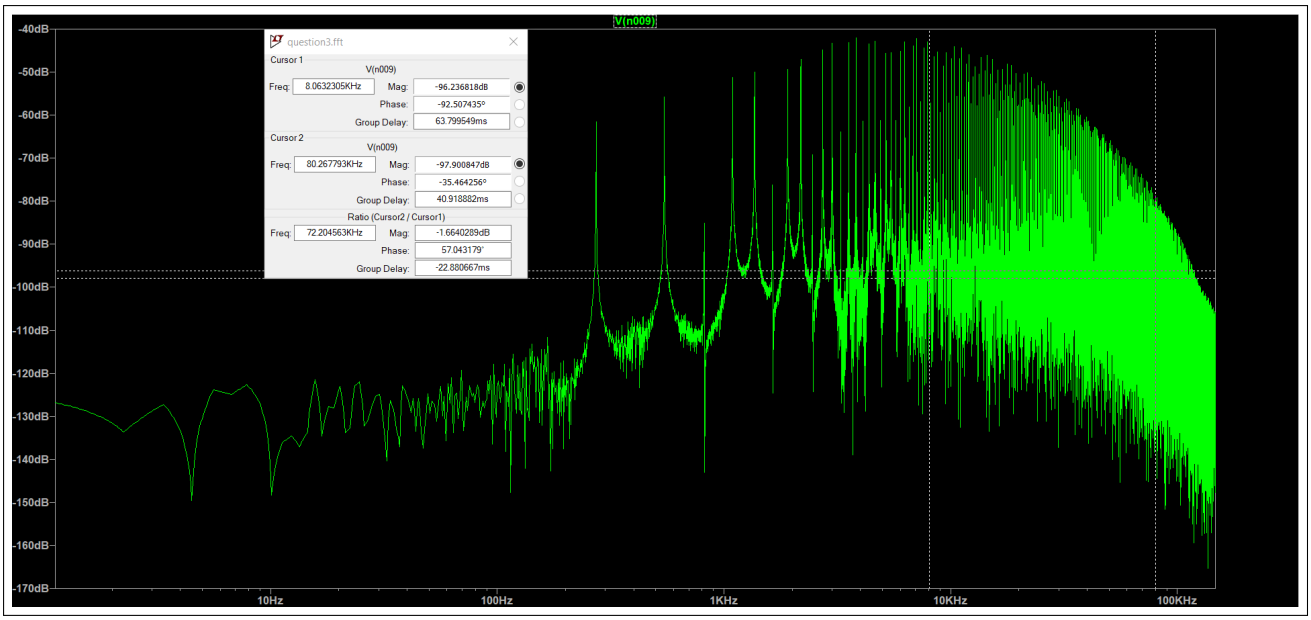

Figure 3.3.3: Minimal ripple with passband between 8KHz and 80kHz

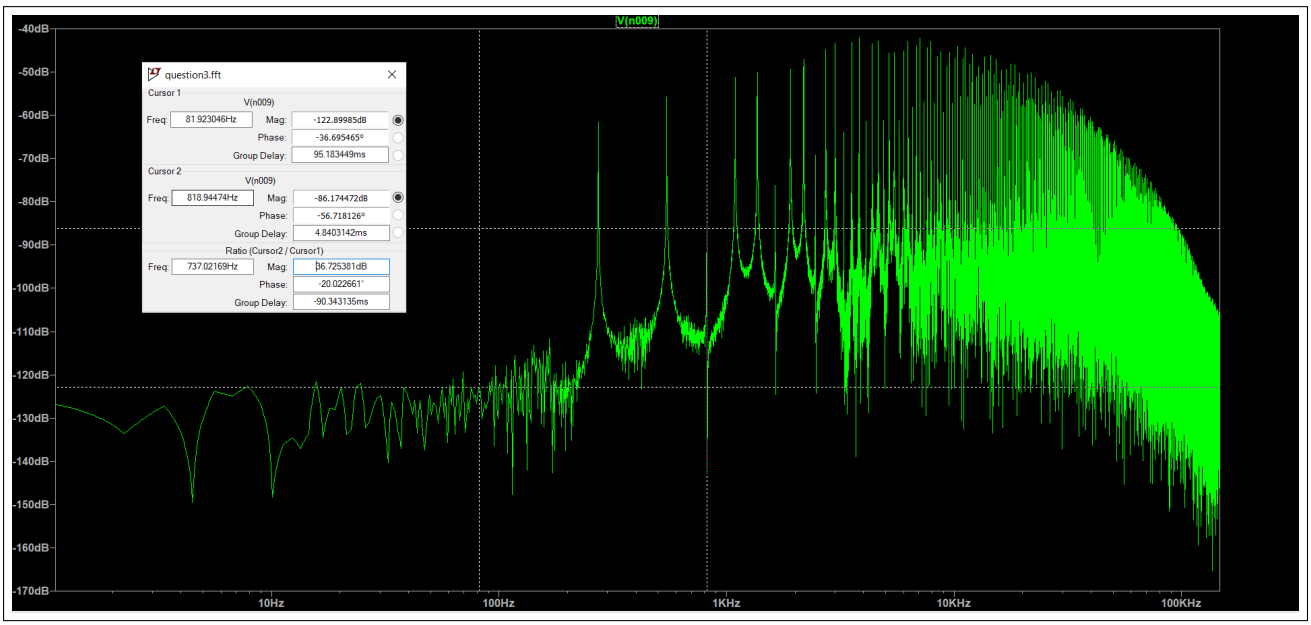

Figure 3.3.4: Minimal ripple with decay rate of 40db/decade

d)

For the minimal ripple passband simulation, the simulations are the most realistic between the three simulations as the theoretical and experimental have the same basic shape. The start and stop of the passband can easily be observed in both theoretical and experimental simulations. The decay rate is also easily observed in both the simulations.

4 Discussion

The first general observations that could be observed in the experiment is how the possibility of combining two types of filters that being a high and low pass filter to create a band pass filter could be done if the topology of a band pass filter could not be used. The high pass and low pass filter combination would not give as good result as a topology designed for a band pass, but it can still be considered an option. The second observation would be the effectiveness of the different filters and the ripple that could be avoided by using a butterworth filter instead of a chybeshv or elliptical filter. The results from the theoretical simulation without the signal generator and with the signal generator delivered unexpected results as some of the simulation results where not entirely as expected and the oscillations on the graphing caused problems when trying to observe certain information, such as the ripple in the Chebyshev filter that the values of the theoretical had to be used on the simulation with the signal generator to be able to observe the ripple. Different filters can be used to generate certain results for a much flatter result with no ripple two Butterworth filters can be cascaded to make a band pass filter. Other filters can be changed to construct a certain result with different outputs. A Butterworth filter has no ripple and a smooth roll off which is monotonic. The Chebyshev filter is design for a much faster roll of rate but to do this a sacrifice has to be made and this causes ripples in the passband.

5 Conclusion

During the experiment we successfully designed and implemented Chebyshev, Butterworth and Minimal ripple bandpass filters. Each filter was then also simulated which gave somewhat unexpected results in some cases when simulated with or without a signal generator. The most unexpected results were obtained when simulating a Chebyshev and Butterworth filter, these unexpected results can be accredited to the oscillation caused in the frequency domain by the signal generator. The plotted responses where however in line with the theoretical expectation.

Bibliography

[1] B. Lathi, *Linear systems andsignal*. Oxford university press, 2th ed., 2010.

[2] G. Parker, "Magnitude and phase of a transfer function." `https://www.youtube.com/watch?v=VwEPXviteAQ`, Mar. 2014.

[3] All about electronics, "Butterworth filter : Design of low pass and high pass filters." `https://www.youtube.com/watch?v=lc6QT8VjqVc`, Oct. 2017.

Appendix A

Python Code

Prepatory Work Code
Chebyshev low-pass filter:

```
import matplotlib.pyplot as plt
import math
import numpy as np


def hf(f):
    return 20 * math.log10(0.4913 /
    np.sqrt(pow(0.4913 - 0.9883 * pow(f / 4000, 2), 2) +
    pow(1.2384 * (f / 4000) - pow(f / 4000, 3), 2)))


xf = np.linspace(1, 100000, 10000, endpoint=True)
yf = [hf(i) for i in xf]

#marker_on = [500, 5000]
#marker_on = [400]
#marker_on = [200, 348]
plt.plot(xf, yf, '-gD', markevery = marker_on)

plt.xscale('log')
plt.xlabel("Frequency(Hz)")
plt.ylabel("Amplitude(dB)")
plt.grid(True)
plt.show()


import matplotlib.pyplot as plt
import numpy as np


def hf(f):
    return (180 / np.pi) *
```

```
    np.angle(0.4913 / (0.4913 + 1.2384 * (1j * f / 4000) + 0.9883
    * pow(1j * f / 4000, 2) + pow(1j * f / 4000, 3)))


xf = np.linspace(1, 100000, 1000, endpoint=True)
yf = [hf(i) for i in xf]

# markers_on = [400]
plt.plot(xf, yf)

plt.xscale('log')
# plt.plot(4000,0.892,'x')
# plt.plot(3460,1,'*')
# plt.plot(2005,0.8911,'+')
plt.xlabel("Frequency(Hz)")
plt.ylabel("Phase(°)")
plt.grid(True)
plt.show()
```

Butterworth high-pass filter:

```
import matplotlib.pyplot as plt
import numpy as np


def hf(f):
    return 20 * np.log10(1 /
    np.sqrt(pow(1 - 2 * pow(8000 / f, 2), 2) +
    pow(2 * (8000 / f) - pow(8000 / f, 3), 2)))


xf = np.linspace(1, 1000000, 100000, endpoint=True)
yf = [hf(i) for i in xf]

#marker_on = [10, 100]
#marker_on = [800]
plt.plot(xf, yf, '-gD', markevery = marker_on)

plt.xscale('log')
plt.xlabel("Frequency(Hz)")
plt.ylabel("Amplitude(dB)")
plt.grid(True)
plt.show()



import matplotlib.pyplot as plt
import numpy as np
```

```
def hf(f):
    return (180 / np.pi) *
    np.angle(1 / (1 + 2 * (8000 / (1j * f)) +
    2 * pow((8000 / (1j * f)), 2) + pow((8000 / (1j * f)), 3)))


xf = np.linspace(1, 100000, 1000, endpoint=True)
yf = [hf(i) for i in xf]

# markers_on = [400]
plt.plot(xf, yf)

plt.xscale('log')
# plt.plot(4000,0.892,'x')
# plt.plot(3460,1,'*')
# plt.plot(2005,0.8911,'+')
plt.xlabel("Frequency(Hz)")
plt.ylabel("Phase(°)")
plt.grid(True)
plt.show()
```

Minimal ripple band-pass filter:

```
import matplotlib.pyplot as plt
import numpy as np


def hf(f):
    return 20 * np.log10(
    np.absolute(1 / (1 + 1.4142 * 1j * ((f / 72000) - (8888.89 / f))
    - pow((f / 72000) - (8888.89 / f), 2))))


xf = np.linspace(1, 1000000, 10000, endpoint=True)
yf = [hf(i) for i in xf]

marker_on = [80, 800]
#marker_on = [8,80]
plt.plot(xf, yf, '-gD', markevery = marker_on)

plt.xscale('log')
# plt.plot(8000,0.5,'x')
# plt.plot(80000,0.5,'*')
# plt.plot(2005,0.8911,'+')
plt.xlabel("Frequency(Hz)")
plt.ylabel("Amplitude(dB)")
plt.grid(True)
plt.show()
```

```python
import matplotlib.pyplot as plt
import numpy as np


def hf(f):
    return (180 / np.pi) * np.angle(1 / (1 + 1.4142 * 1j *
    ((f / 72000) - (8888.89 / f)) - pow((f / 72000) -
    (8888.89 / f), 2)))


xf = np.linspace(1, 1000000, 10000, endpoint=True)
yf = [hf(i) for i in xf]

marker_on = [80, 800]
plt.plot(xf, yf, '-gD', markevery=marker_on)

plt.xscale('log')
# plt.plot(8000,0.5,'x')
# plt.plot(80000,0.5,'*')
# plt.plot(2005,0.8911,'+')
plt.xlabel("Frequency(Hz)")
plt.ylabel("Phase(°)")
plt.grid(True)
plt.show()
```