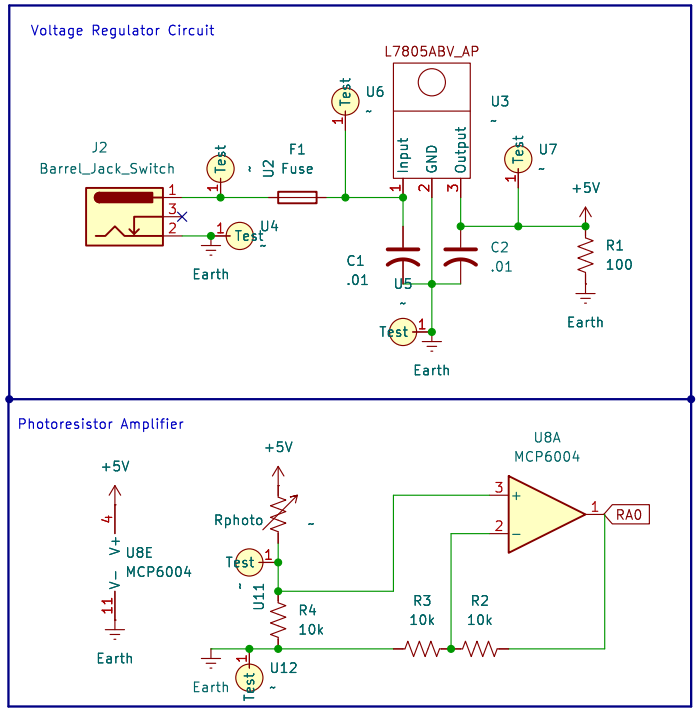

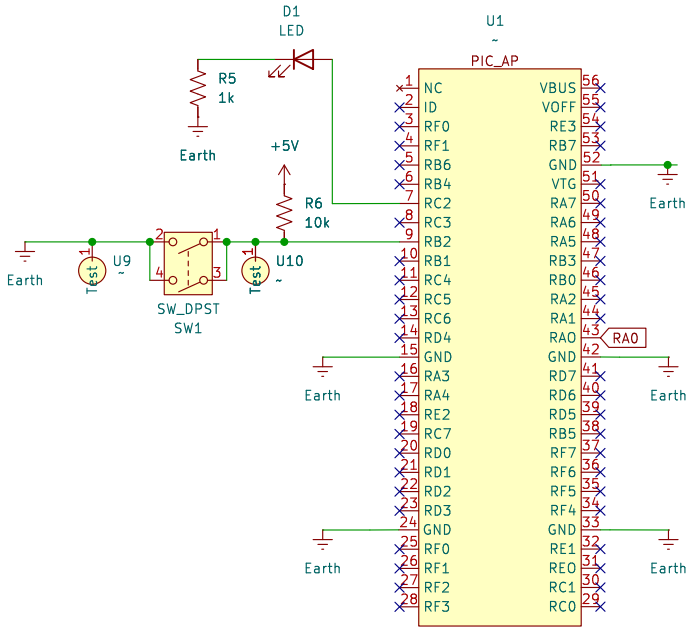

Sheet: /
File: Subsystem Schematic.kicad_sch

Title: AP Subsystem

Size: A4	Date: 2025-10-20	Rev:
KiCad E.D.A. 9.0.4		Id: 1/1