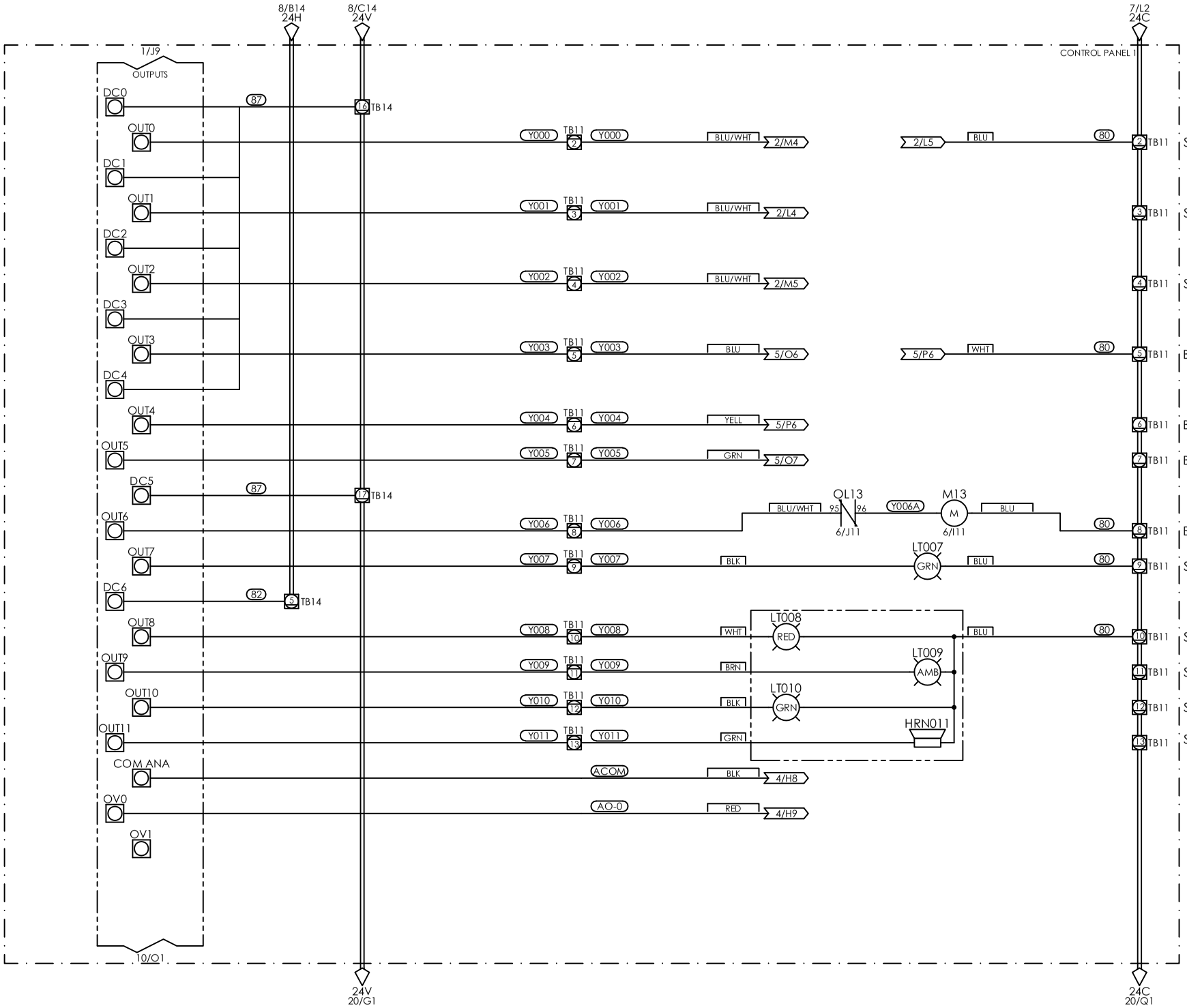

REV.	DESCRIPTION	BY	DATE	APPROVED
	INITIAL RELEASE	RB	9.4.13	

THE INFORMATION CONTAINED IN THIS DRAWING IS THE SOLE PROPERTY OF PRODUCTION ASSEMBLY SYSTEMS, INC. ANY REPRODUCTION IN PART OR WHOLE WITHOUT THE WRITTEN PERMISSION OF PAS IS PROHIBITED.

DRAWN BY: SD | ENGINEER: RB | CHECKED BY: | SCALE: NTS | PROJECT #: 16071 | TITLE: MAIN CONTROL ENCLOSURE I/O ELECTRICALS | DWG #: 16071-E-809 | SHEET: SHEET 9 OF 21

PRODUCTION SYSTEMS
Design and Manufacture of Automated Assembly Equipment