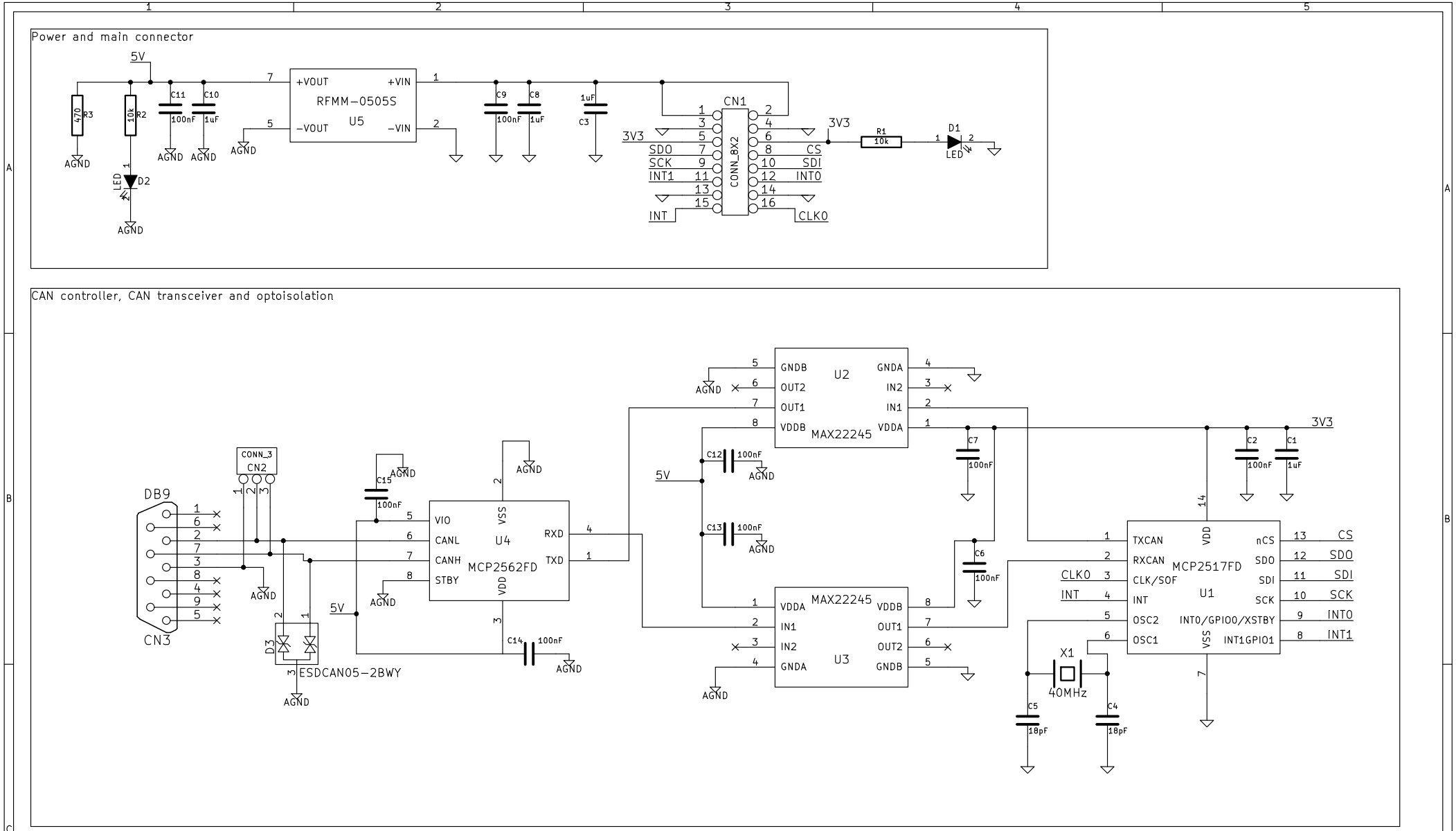

File: CANFD_OptoIsolationBoard.sch		
Sheet: /		
Title: CANFD_OptoIsolationBoard.sch		
Size: A4	Date: 2 apr 2022	**Rev:**
KiCad E.D.A. eeschema (2013-07-07 BZR 4022)-stable		Id: 1/1