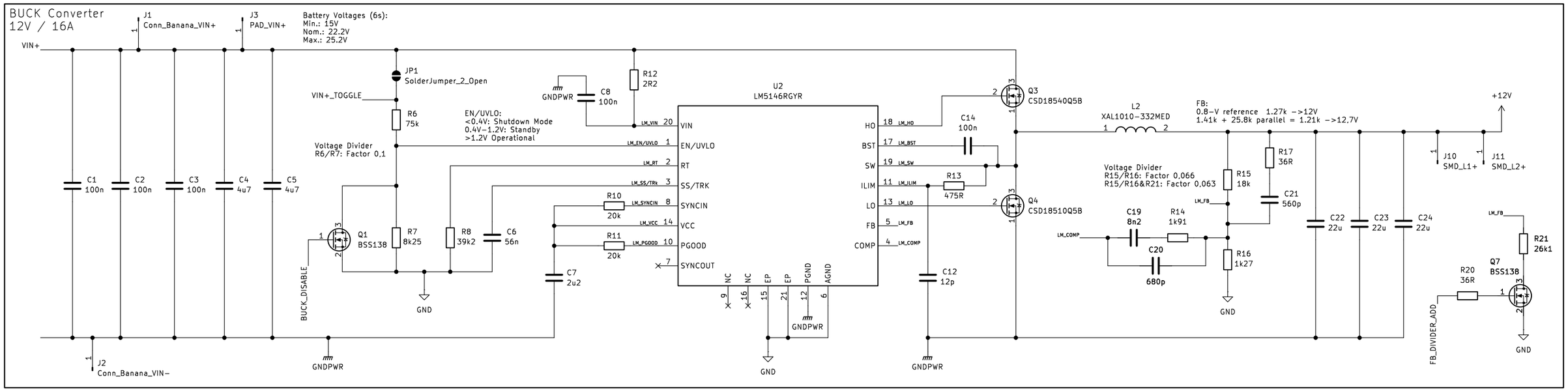

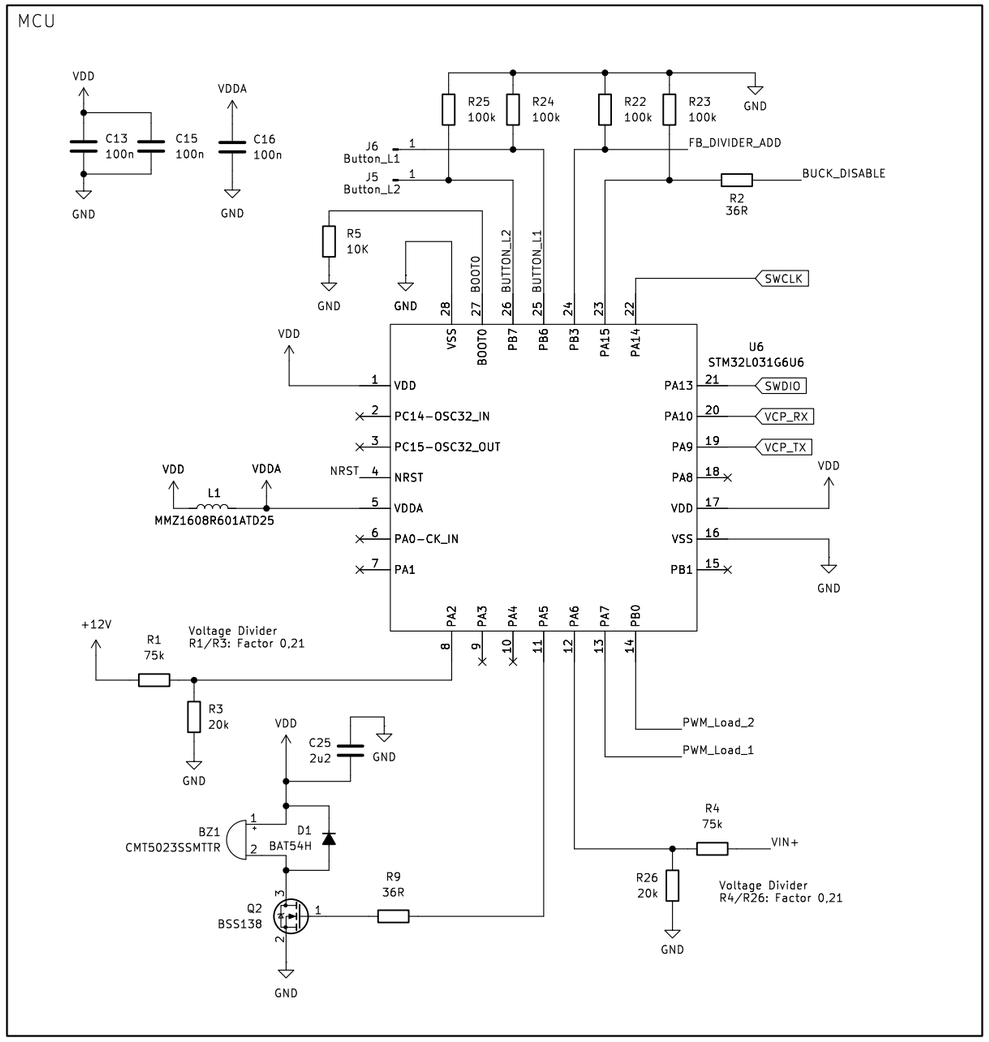

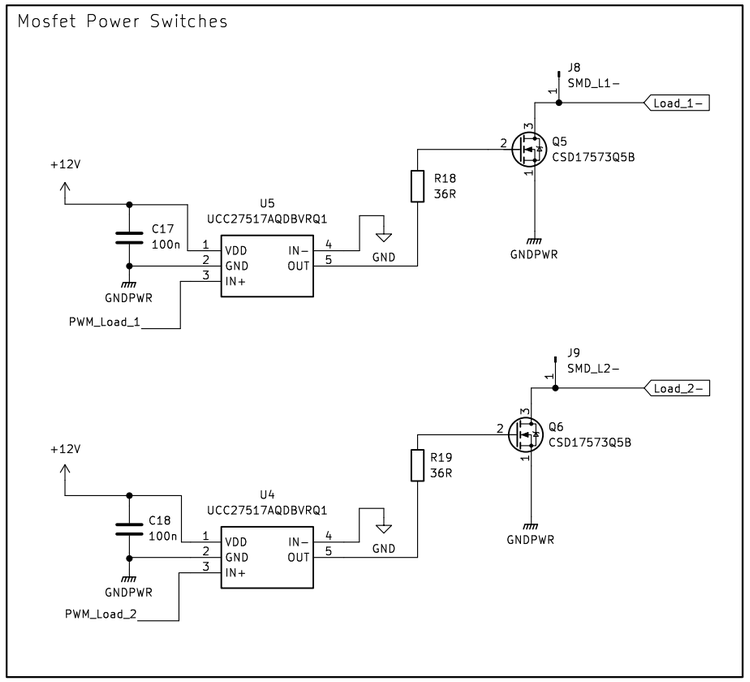

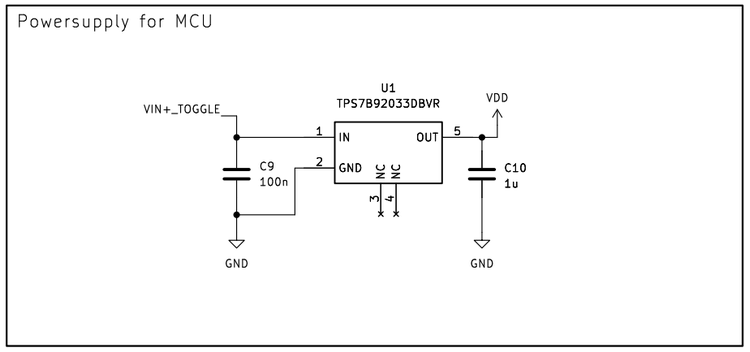

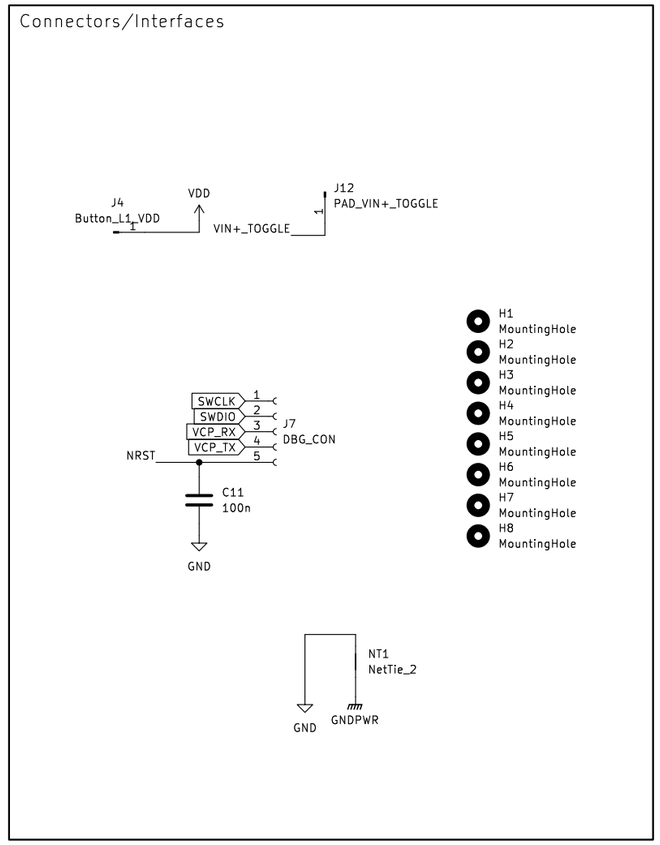

Sheet: /
File: buck_mcu_stage.kicad_sch

Title: BUCK & MCU Stage

Size: A3	Date: 2025-04-16	Rev: A
KiCad E.D.A. 8.0.4		Id: 1/1