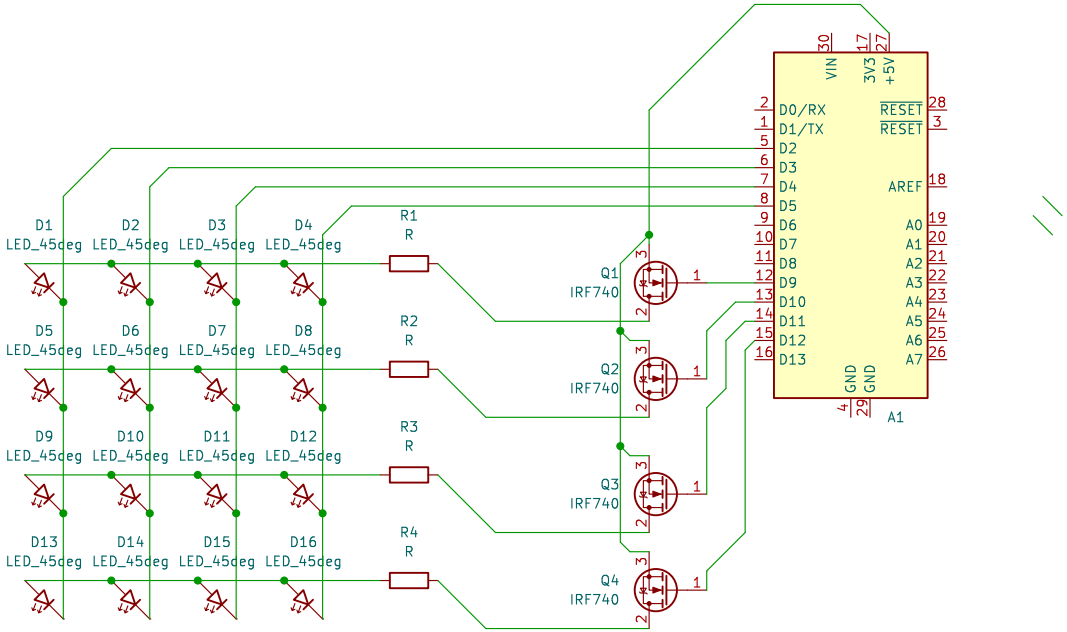

Sheet: /
File: Multiplexed LEDS.kicad_sch

Title: 4x4 Multiplexed LED Matrix

Size: A5	Date: 2024-05-26	Rev:
KiCad E.D.A. kicad 7.0.10		Id: 1/1