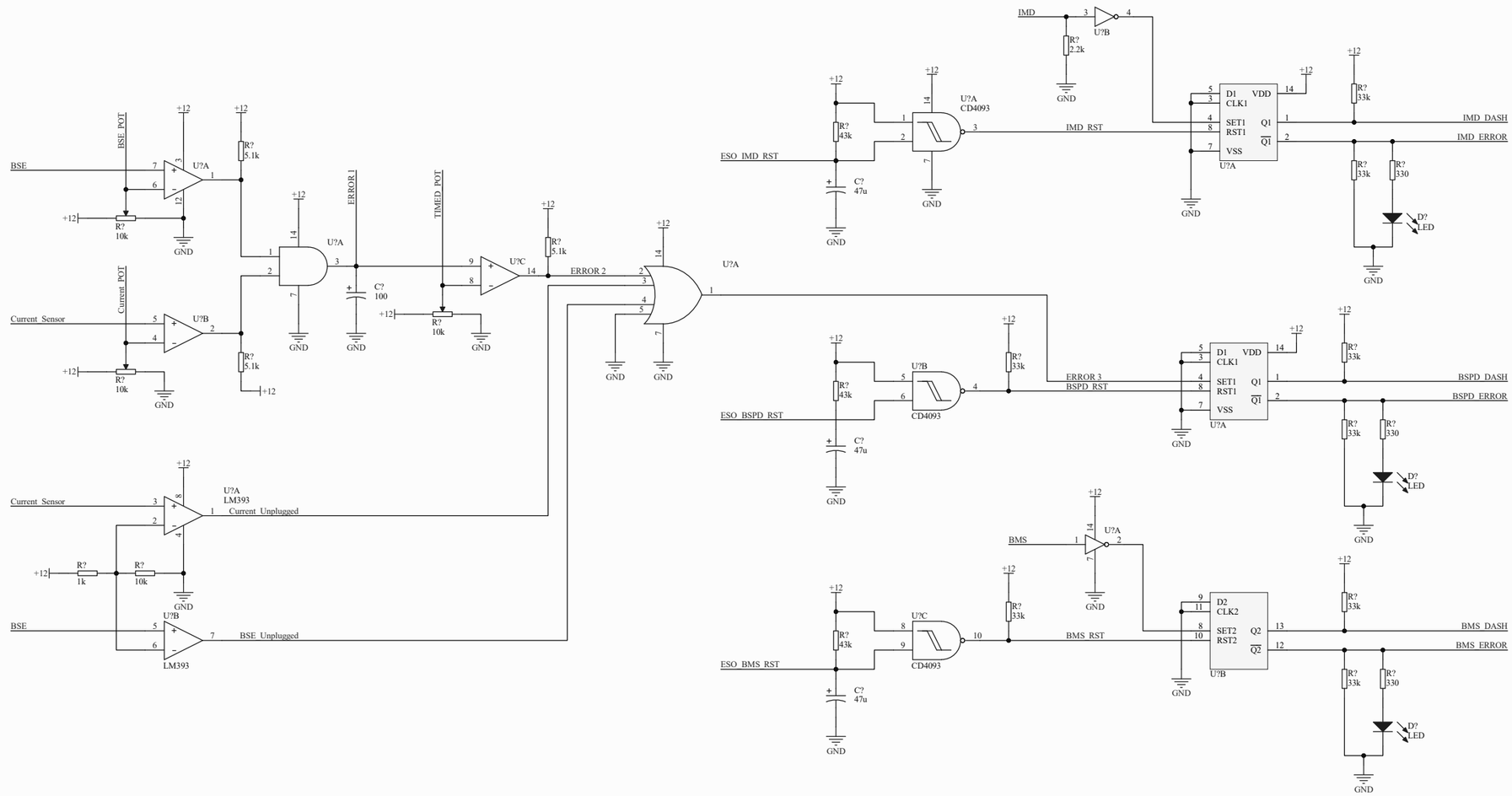

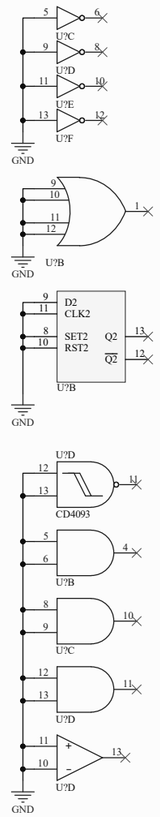

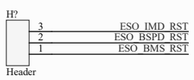

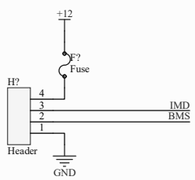

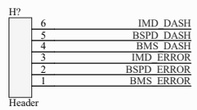

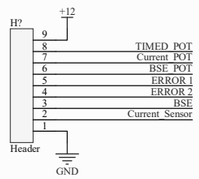

Title		
Size A2	Number	Revision
Date: 9/20/2023		Sheet of
File: C:\Users\...\BSPD.SchDoc		Drawn By: