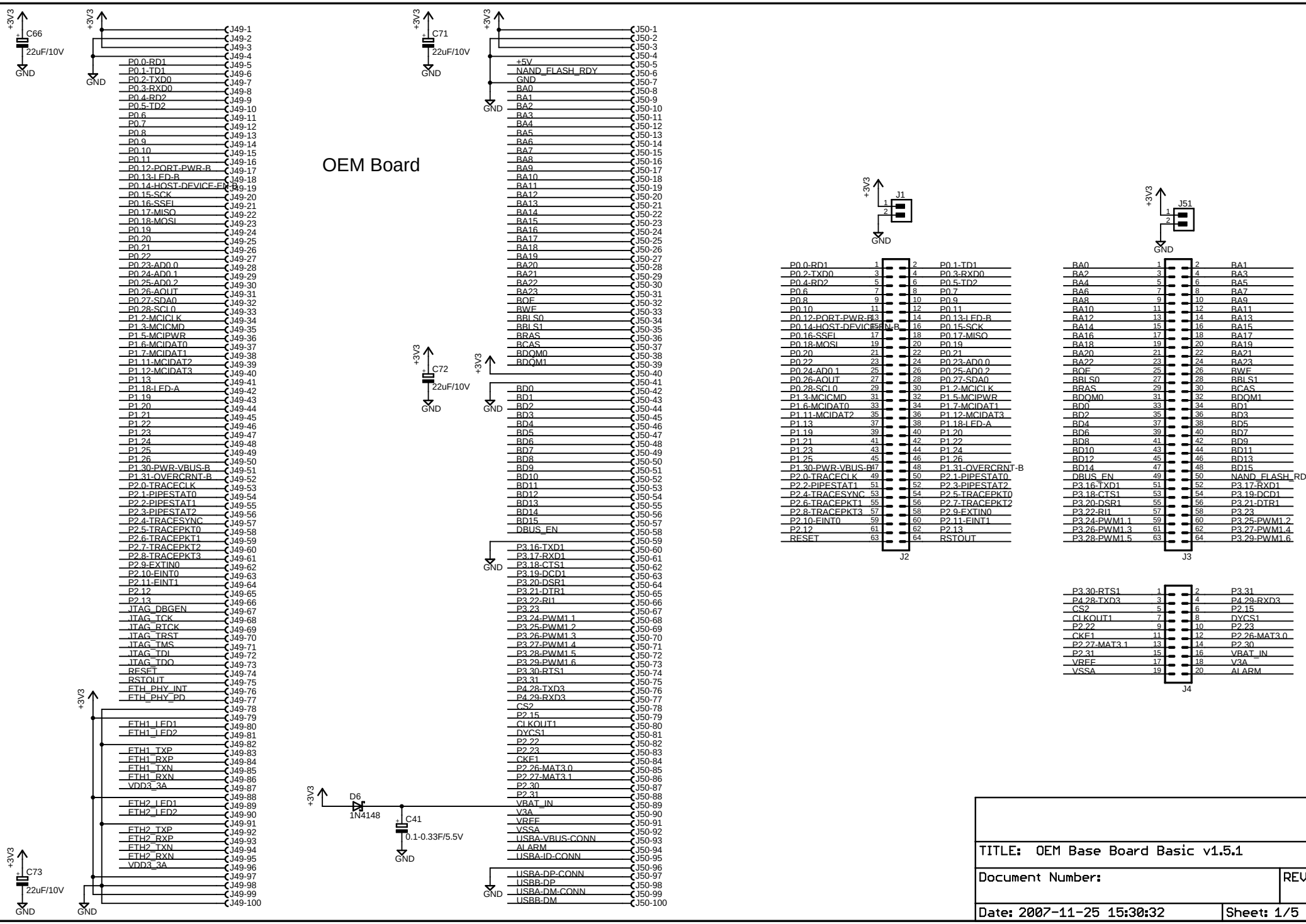
OEM Board
C66
22uF/10V
C71
22uF/10V
C72
22uF/10V
C73
22uF/10V
C41
0.1-0.33F/5.5V
D6
1N4148
+3V3
GND
J49-1
J49-2
J49-3
J49-4
J49-5
J49-6
J49-7
J49-8
J49-9
J49-10
J49-11
J49-12
J49-13
J49-14
J49-15
J49-16
J49-17
J49-18
J49-19
J49-20
J49-21
J49-22
J49-23
J49-24
J49-25
J49-26
J49-27
J49-28
J49-29
J49-30
J49-31
J49-32
J49-33
J49-34
J49-35
J49-36
J49-37
J49-38
J49-39
J49-40
J49-41
J49-42
J49-43
J49-44
J49-45
J49-46
J49-47
J49-48
J49-49
J49-50
J49-51
J49-52
J49-53
J49-54
J49-55
J49-56
J49-57
J49-58
J49-59
J49-60
J49-61
J49-62
J49-63
J49-64
J49-65
J49-66
J49-67
J49-68
J49-69
J49-70
J49-71
J49-72
J49-73
J49-74
J49-75
J49-76
J49-77
J49-78
J49-79
J49-80
J49-81
J49-82
J49-83
J49-84
J49-85
J49-86
J49-87
J49-88
J49-89
J49-90
J49-91
J49-92
J49-93
J49-94
J49-95
J49-96
J49-97
J49-98
J49-99
J49-100
P0.0-RD1
P0.1-TD1
P0.2-TXD0
P0.3-RXD0
P0.4-RD2
P0.5-TD2
P0.6
P0.7
P0.8
P0.9
P0.10
P0.11
P0.12-PORT-PWR-B
P0.13-LED-B
P0.14-HOST-DEVICE-FND-B
P0.15-SCK
P0.16-SSEL
P0.17-MISO
P0.18-MOSI
P0.19
P0.20
P0.21
P0.22
P0.23-AD0.0
P0.24-AD0.1
P0.25-AD0.2
P0.26-AOUT
P0.27-SDA0
P0.28-SCL0
P1.2-MCICLK
P1.3-MCICMD
P1.5-MCIPWR
P1.6-MCIDAT0
P1.7-MCIDAT1
P1.11-MCIDAT2
P1.12-MCIDAT3
P1.13
P1.18-LED-A
P1.19
P1.20
P1.21
P1.22
P1.23
P1.24
P1.25
P1.26
P1.30-PWR-VBUS-B
P1.31-OVERCRNT-B
P2.0-TRACECLK
P2.1-PIPESTAT0
P2.2-PIPESTAT1
P2.3-PIPESTAT2
P2.4-TRACESYNC
P2.5-TRACEPKT0
P2.6-TRACEPKT1
P2.7-TRACEPKT2
P2.8-TRACEPKT3
P2.9-EXTIN0
P2.10-EINT0
P2.11-EINT1
P2.12
P2.13
JTAG_DBGEN
JTAG_TCK
JTAG_RTCK
JTAG_TRST
JTAG_TMS
JTAG_TDI
JTAG_TDO
RESET
RSTOUT
ETH_PHY_INT
ETH_PHY_PD
ETH1_LED1
ETH1_LED2
ETH1_TXP
ETH1_RXP
ETH1_TXN
ETH1_RXN
VDD3_3A
ETH2_LED1
ETH2_LED2
ETH2_TXP
ETH2_RXP
ETH2_TXN
ETH2_RXN
VDD3_3A
J50-1
J50-2
J50-3
J50-4
J50-5
J50-6
J50-7
J50-8
J50-9
J50-10
J50-11
J50-12
J50-13
J50-14
J50-15
J50-16
J50-17
J50-18
J50-19
J50-20
J50-21
J50-22
J50-23
J50-24
J50-25
J50-26
J50-27
J50-28
J50-29
J50-30
J50-31
J50-32
J50-33
J50-34
J50-35
J50-36
J50-37
J50-38
J50-39
J50-40
J50-41
J50-42
J50-43
J50-44
J50-45
J50-46
J50-47
J50-48
J50-49
J50-50
J50-51
J50-52
J50-53
J50-54
J50-55
J50-56
J50-57
J50-58
J50-59
J50-60
J50-61
J50-62
J50-63
J50-64
J50-65
J50-66
J50-67
J50-68
J50-69
J50-70
J50-71
J50-72
J50-73
J50-74
J50-75
J50-76
J50-77
J50-78
J50-79
J50-80
J50-81
J50-82
J50-83
J50-84
J50-85
J50-86
J50-87
J50-88
J50-89
J50-90
J50-91
J50-92
J50-93
J50-94
J50-95
J50-96
J50-97
J50-98
J50-99
J50-100
+5V
NAND_FLASH_RDY
BA0
BA1
BA2
BA3
BA4
BA5
BA6
BA7
BA8
BA9
BA10
BA11
BA12
BA13
BA14
BA15
BA16
BA17
BA18
BA19
BA20
BA21
BA22
BA23
BOE
BWE
BBLS0
BBLS1
BRAS
BCAS
BDQM0
BDQM1
BD0
BD1
BD2
BD3
BD4
BD5
BD6
BD7
BD8
BD9
BD10
BD11
BD12
BD13
BD14
BD15
DBUS_EN
P3.16-TXD1
P3.17-RXD1
P3.18-CTS1
P3.19-DCD1
P3.20-DSR1
P3.21-DTR1
P3.22-RI1
P3.23
P3.24-PWM1.1
P3.25-PWM1.2
P3.26-PWM1.3
P3.27-PWM1.4
P3.28-PWM1.5
P3.29-PWM1.6
P3.30-RTS1
P3.31
P4.28-TXD3
P4.29-RXD3
CS2
P2.15
CLKOUT1
DYCS1
P2.22
P2.23
CKE1
P2.26-MAT3.0
P2.27-MAT3.1
P2.30
P2.31
VBAT_IN
V3A
VREF
VSSA
USBA-VBUS-CONN
ALARM
USBA-ID-CONN
USBA-DP-CONN
USBB-DP
USBA-DM-CONN
USBB-DM
J1
J2
J3
J4
J51
P0.0-RD1
P0.1-TD1
P0.2-TXD0
P0.3-RXD0
P0.4-RD2
P0.5-TD2
P0.6
P0.7
P0.8
P0.9
P0.10
P0.11
P0.12-PORT-PWR-B
P0.13-LED-B
P0.14-HOST-DEVICE-FND-B
P0.15-SCK
P0.16-SSEL
P0.17-MISO
P0.18-MOSI
P0.19
P0.20
P0.21
P0.22
P0.23-AD0.0
P0.24-AD0.1
P0.25-AD0.2
P0.26-AOUT
P0.27-SDA0
P0.28-SCL0
P1.2-MCICLK
P1.3-MCICMD
P1.5-MCIPWR
P1.6-MCIDAT0
P1.7-MCIDAT1
P1.11-MCIDAT2
P1.12-MCIDAT3
P1.13
P1.18-LED-A
P1.19
P1.20
P1.21
P1.22
P1.23
P1.24
P1.25
P1.26
P1.30-PWR-VBUS-B
P1.31-OVERCRNT-B
P2.0-TRACECLK
P2.1-PIPESTAT0
P2.2-PIPESTAT1
P2.3-PIPESTAT2
P2.4-TRACESYNC
P2.5-TRACEPKT0
P2.6-TRACEPKT1
P2.7-TRACEPKT2
P2.8-TRACEPKT3
P2.9-EXTIN0
P2.10-EINT0
P2.11-EINT1
P2.12
P2.13
RESET
RSTOUT
BA0
BA1
BA2
BA3
BA4
BA5
BA6
BA7
BA8
BA9
BA10
BA11
BA12
BA13
BA14
BA15
BA16
BA17
BA18
BA19
BA20
BA21
BA22
BA23
BOE
BWE
BBLS0
BBLS1
BRAS
BCAS
BDQM0
BDQM1
BD0
BD1
BD2
BD3
BD4
BD5
BD6
BD7
BD8
BD9
BD10
BD11
BD12
BD13
BD14
BD15
DBUS_EN
NAND_FLASH_RDY
P3.16-TXD1
P3.17-RXD1
P3.18-CTS1
P3.19-DCD1
P3.20-DSR1
P3.21-DTR1
P3.22-RI1
P3.23
P3.24-PWM1.1
P3.25-PWM1.2
P3.26-PWM1.3
P3.27-PWM1.4
P3.28-PWM1.5
P3.29-PWM1.6
P3.30-RTS1
P3.31
P4.28-TXD3
P4.29-RXD3
CS2
P2.15
CLKOUT1
DYCS1
P2.22
P2.23
CKE1
P2.26-MAT3.0
P2.27-MAT3.1
P2.30
P2.31
VBAT_IN
V3A
VREF
VSSA
ALARM
TITLE: OEM Base Board Basic v1.5.1
Document Number:
REV:
Date: 2007-11-25 15:30:32
Sheet: 1/5

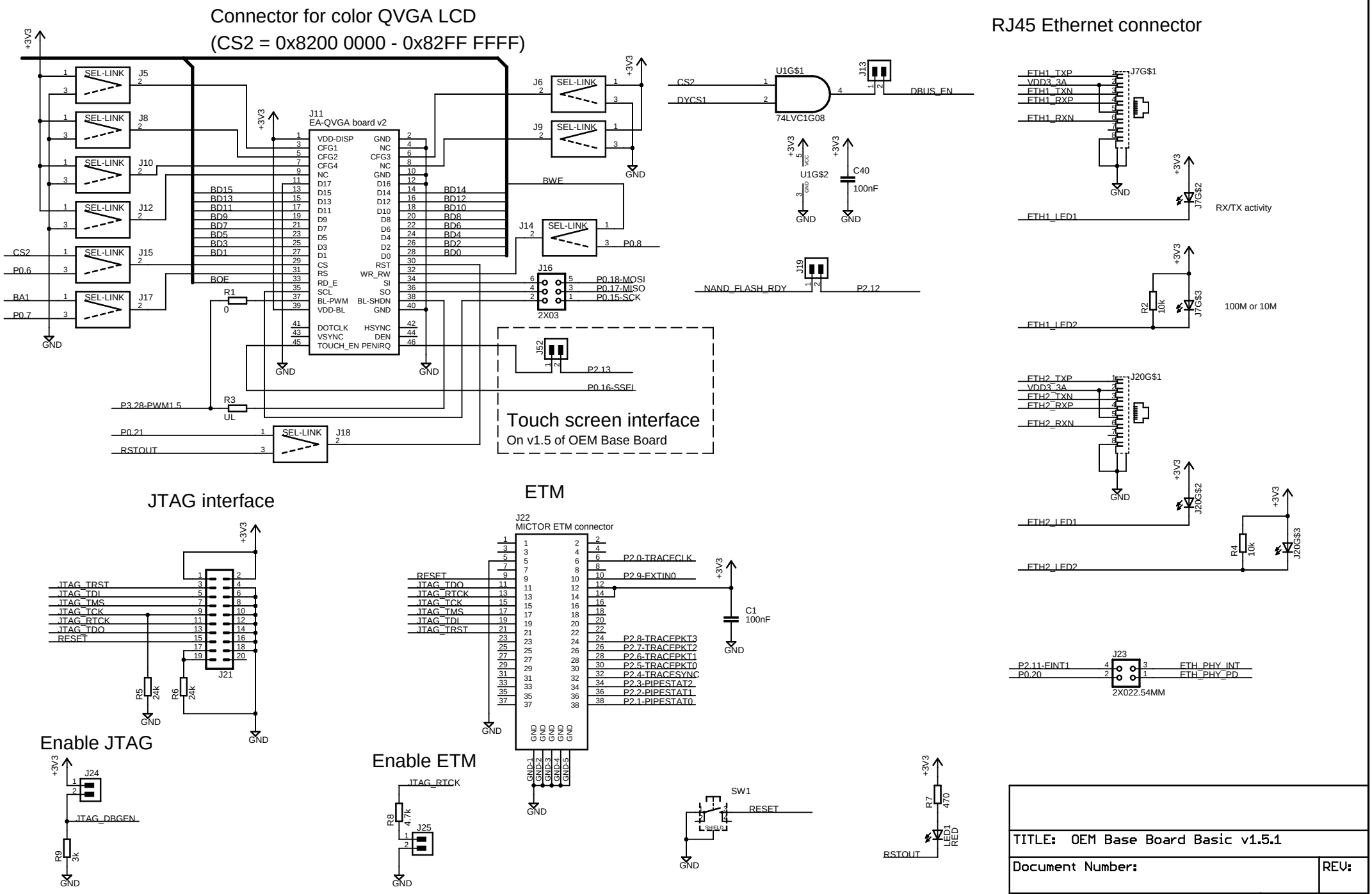
Connector for color QVGA LCD
(CS2 = 0x8200 0000 - 0x82FF FFFF)
RJ45 Ethernet connector
J11
EA-QVGA board v2
Touch screen interface
On v1.5 of OEM Base Board
JTAG interface
ETM
J22
MICTOR ETM connector
Enable JTAG
Enable ETM
RX/TX activity
100M or 10M
2X022.54MM
74LVC1G08
2X03
SW1
TITLE: OEM Base Board Basic v1.5.1
Document Number:
REV:
Date: 2007-11-25 15:30:32
Sheet: 2/5

Analog inputs

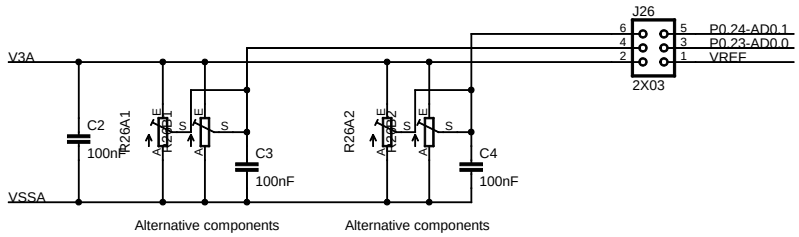

Push-buttons and LEDs

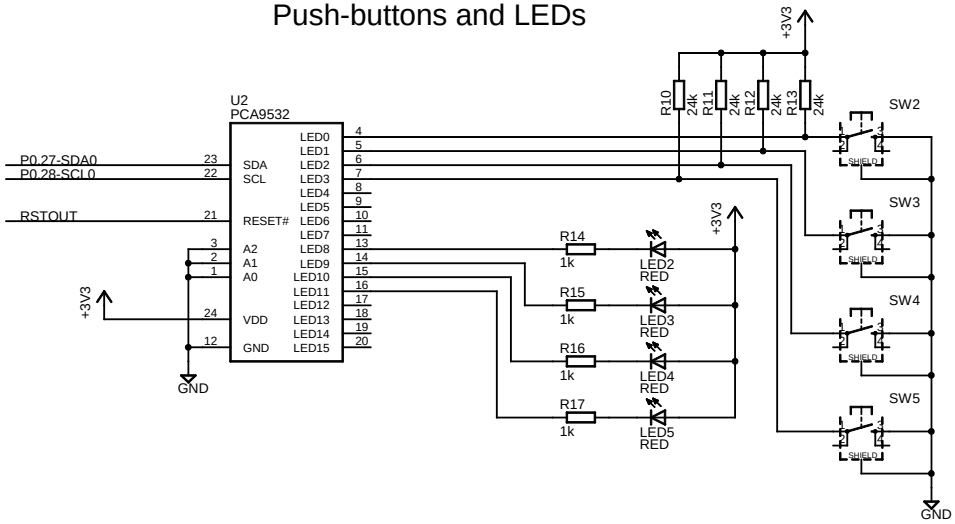

MMC/SD Memory Card I/F

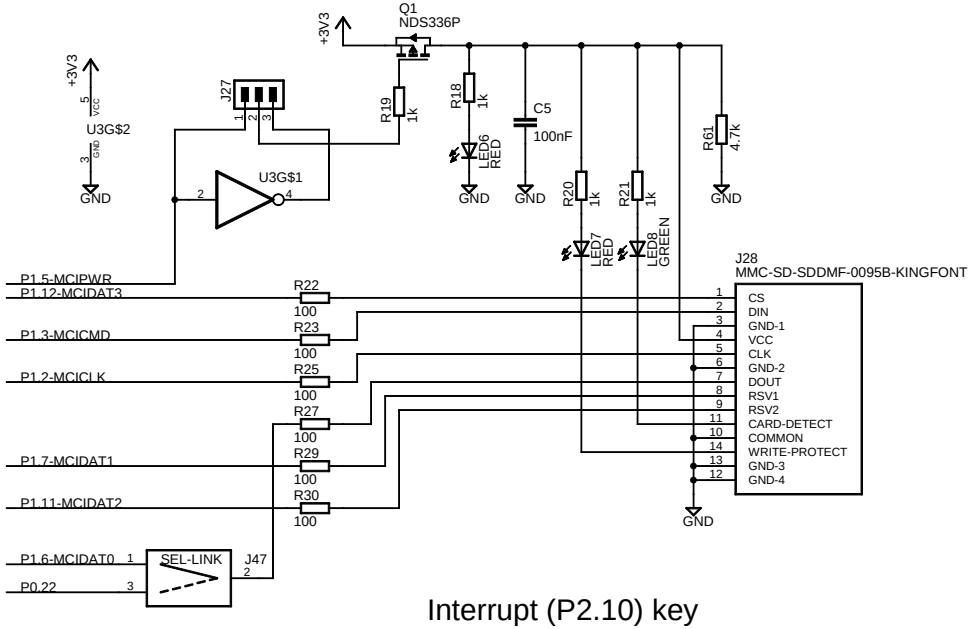

Interrupt (P2.10) key

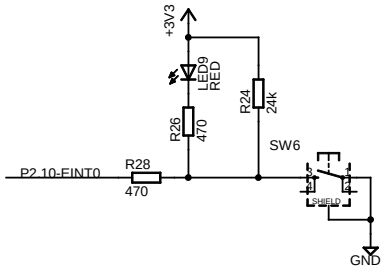

On v1.5 of OEM Base Board

Speaker amplifier

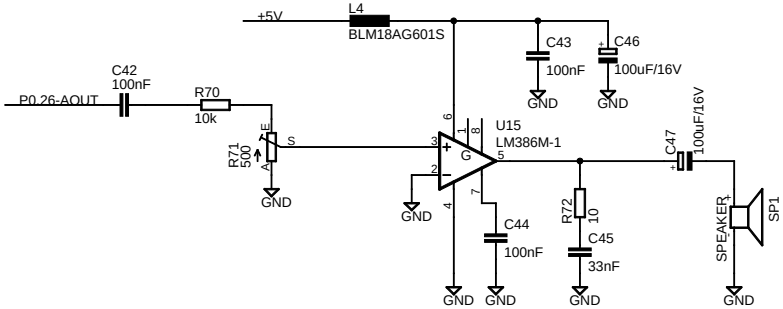

TITLE: OEM Base Board Basic v1.5.1	
Document Number:	REV:
Date: 2007-11-25 15:30:32	Sheet: 3/5

Power Supply

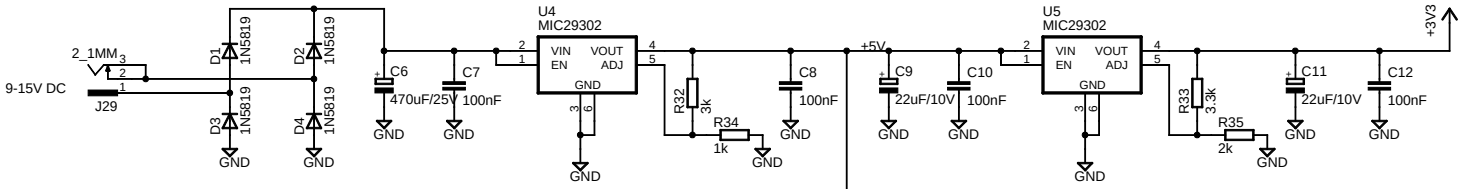

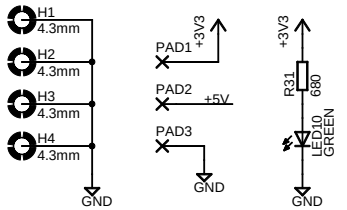

UART #0 over USB Serial Bridge

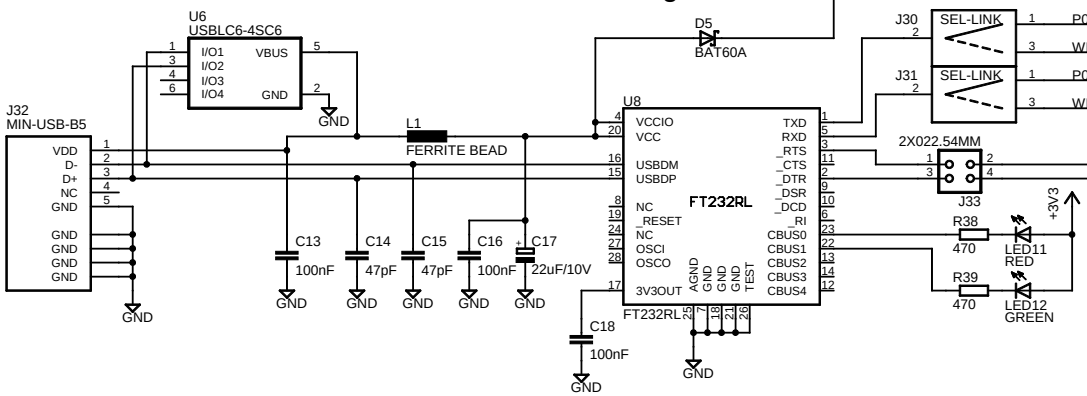

ISP functionality

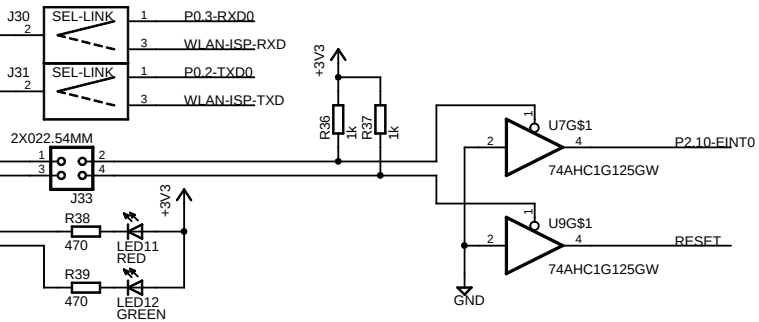

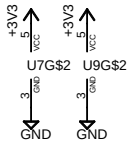

UART #1 RS232 full modem

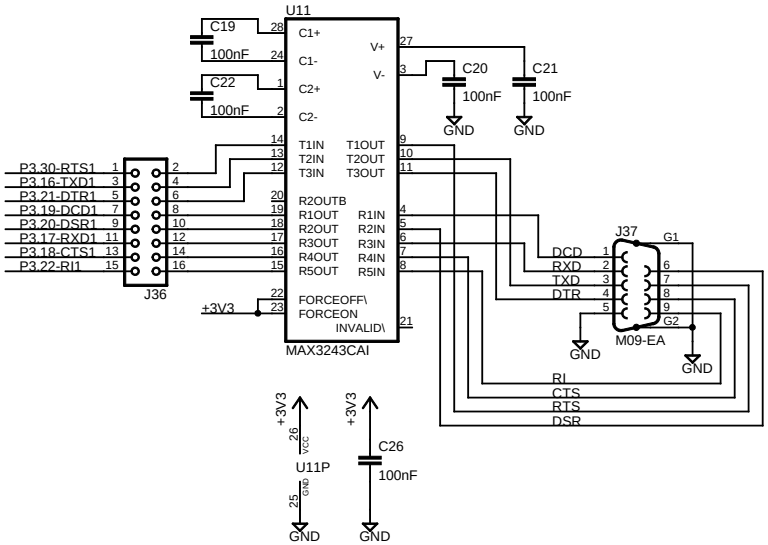

CAN transceiver

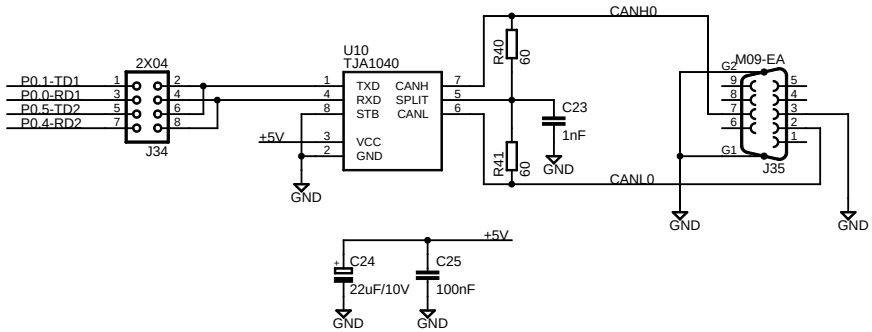

TITLE: OEM Base Board Basic v1.5.1		
Document Number:		REV:
Date: 2007-11-25 15:30:32	Sheet: 4/5	

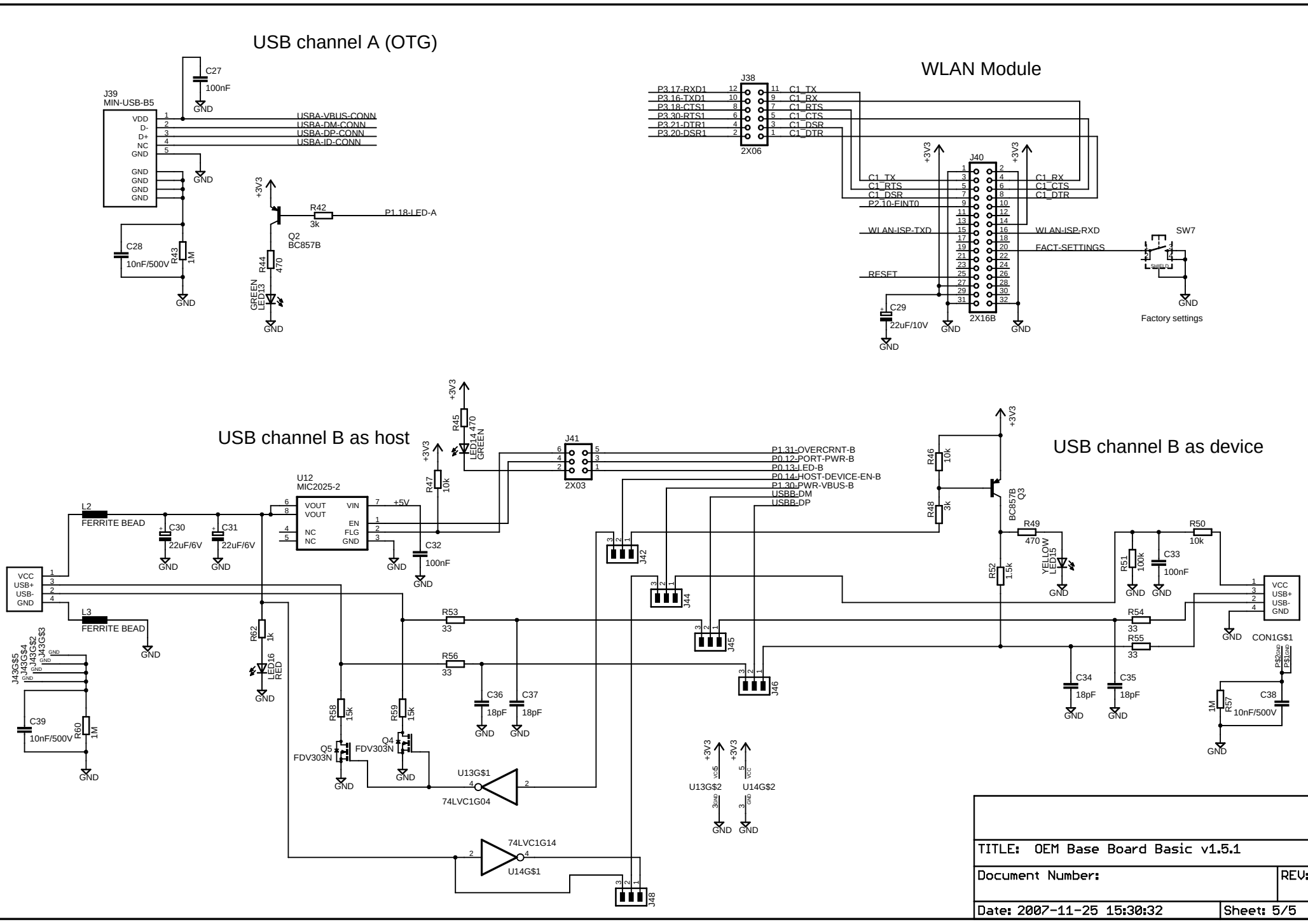

TITLE: OEM Base Board Basic v1.5.1	
Document Number:	REV:
Date: 2007-11-25 15:30:32	Sheet: 5/5