[00] - Title and System Overview

AMMDK Common Compute Board

SHEET TITLE: **[00] - Title Block**	INTERNAL CODE NAME **AMMDK**	PART NAME: **AMM Common Compute Board**	
VARIANT ID **No Variant**	CLIENT PROJECT NAME **Advanced Modular Manikin**	PART NUMBER **100000**	
DOCUMENT NUMBER: **QQBSQRNV**	CLIENT CONTRACT NUMBER: **BPO27990**	AUTHOR: **Matthew Pang**	
REVISION **0.1.0**	MAIN CONTRACT NUMBER: **W81XWH-14-C-0101**	APPROVED BY: **Benjamin Riggs**	
RELEASE LEVEL: **Draft**	PREPARED FOR CLIENT: **UW CREST**	CHECKED BY: **Gus O'Hanley**	
Date: 2/14/2018 Time: 5:03:11 PM	Sheet 1 of	Size: A3	

Distribution Statement: Approved for Public Release, Distribution Unlimited

Entropic Engineering LLC
670 Transfer Rd
St Paul, MN 55114
United States

Phone: +1 (612) 860 8901
Email: team@entreng.com

© ENTROPIC ENGINEERING 2017

TABLE OF CONTENTS

PAGE #	DESCRIPTION
1	Title Block
2	Table Of Contents
3	Logical Block Diagram
4	Power Flow Block Diagram 1
5	Power Flow Block Diagram 2
6	Power Regulator 1
7	Power Regulator 2
8	SOM B2B 1
9	SOM B2B 2
10	USB HUB 3.0
11	USB SS and HS
12	HDMI
13	PCIE
14	Ethernet
15	Micro Sd Card
16	Debug Serial And Fast Boot
17	Automation Connector
18	LEDs and Switches
19	SOM Boot Conifguration
20	K66F
21	Open SDA Interface
22	GPIOS
23	Revision History
24	Blank Page

Entropic Manikin LLC,
670 Transfer Rd,
St Paul, MN55114 USA

TITLE
Table Of Contents

SIZE	DRAWING NO	REV
C	**AMMDK-0A1**	2.1

SCALE	NONE	RELEASE DATE	21/08/2018	SHEET	2	OF	24

LOGICAL BLOCK DIAGRAM

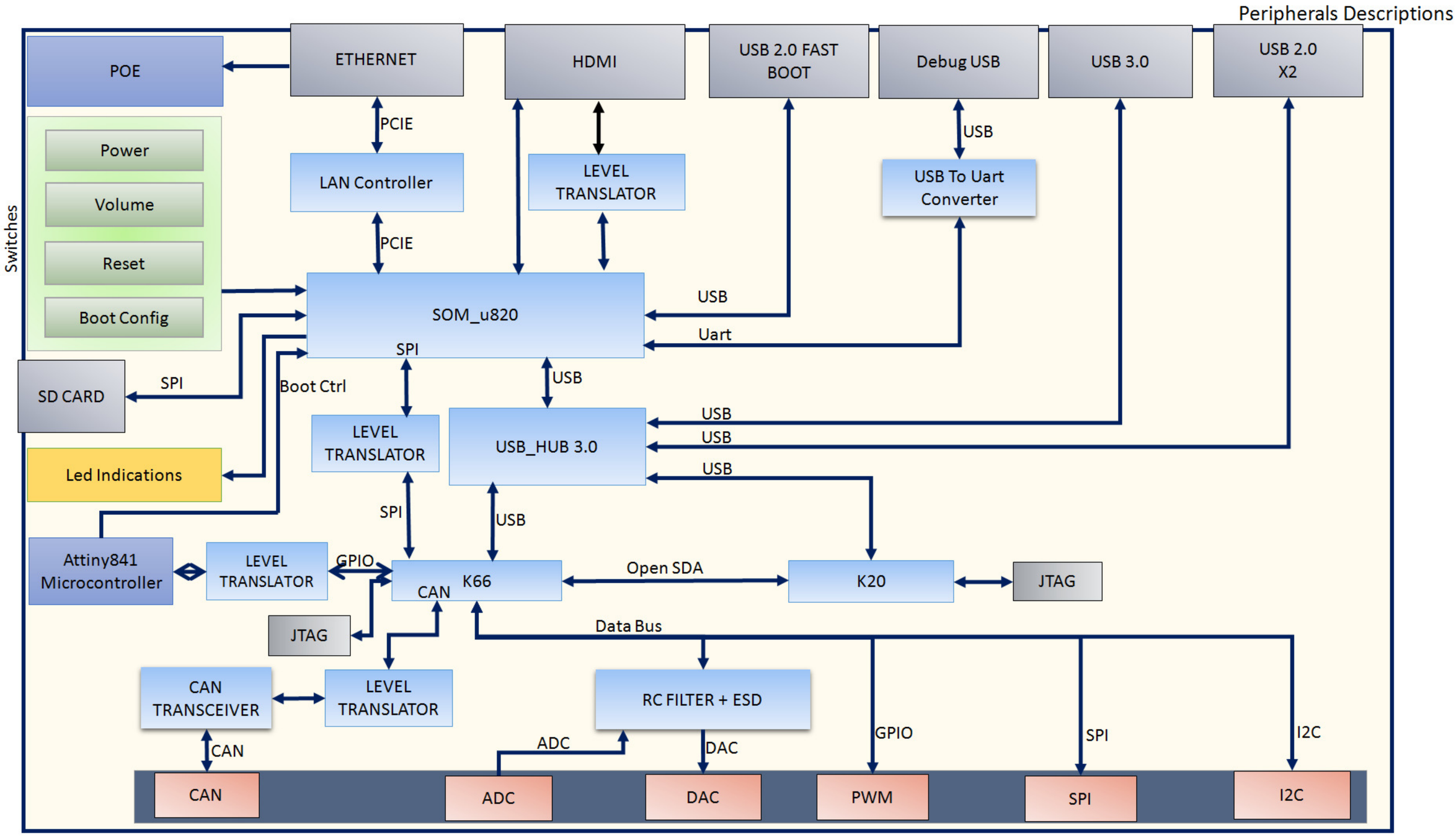

Entropic Manikin LLC, 670 Transfer Rd, St Paul, MN55114 USA	TITLE: **Block Diagram 1**		
	SIZE: C	DRAWING NO: **AMMDK-0A1**	REV: 2.1
	SCALE: NONE	RELEASE DATE: 21/08/2018	SHEET 3 OF 24

POWER FLOW BLOCK DIAGRAM 1

Power Flow & Distribution

Hints:-

Start — When Powered Through POE

Start — When Powered Through DC Jack

Flow Direction

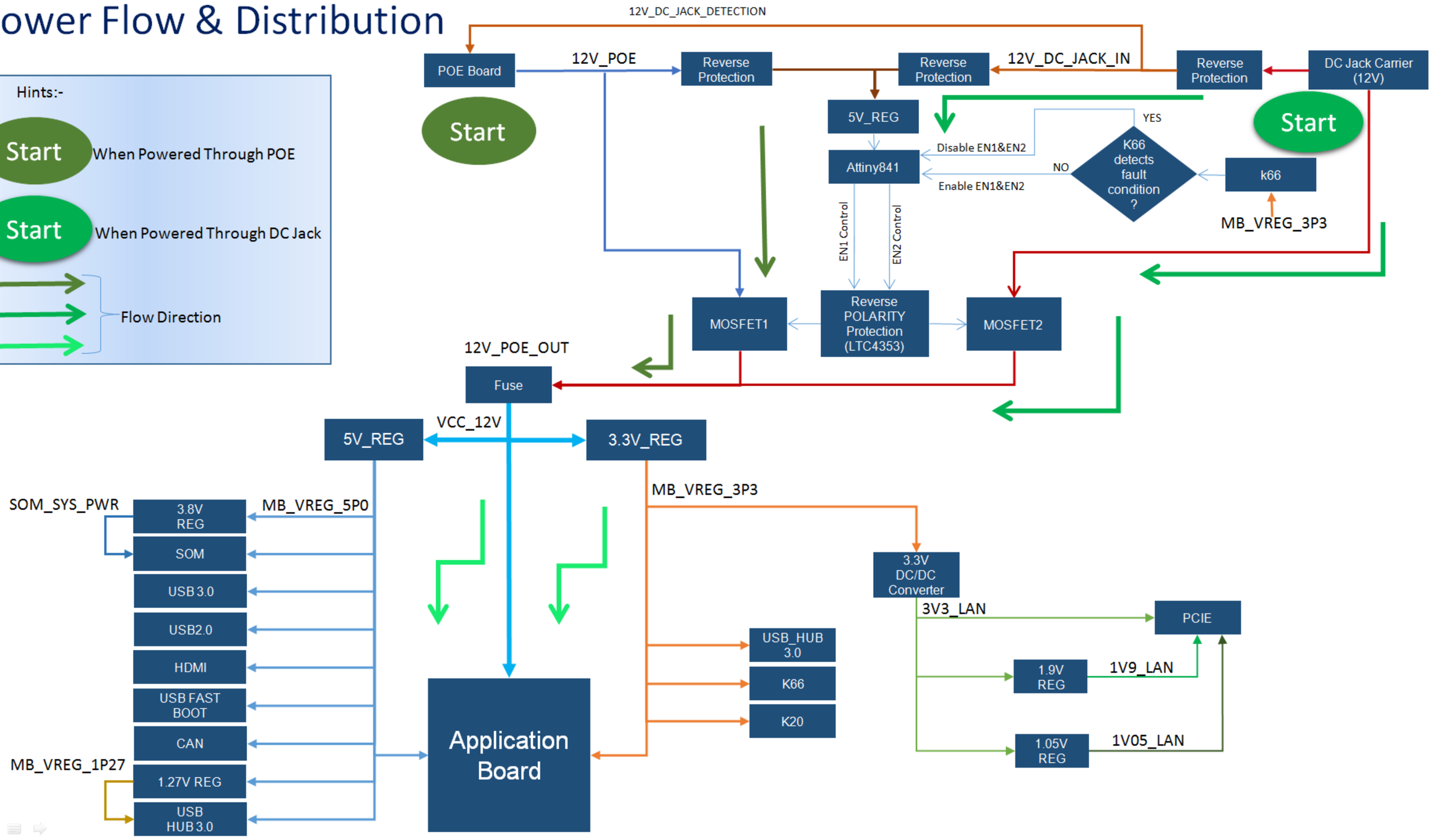

TITLE: **Block Diagram 2**			
Entropic Manikin LLC, 670 Transfer Rd, St Paul, MN55114 USA	SIZE: C	DRAWING NO: **AMMDK-0A1**	REV: 2.1
	SCALE: NONE	RELEASE DATE: 21/08/2018	SHEET: 4 OF 24

POWER FLOW BLOCK DIAGRAM 2

Signal
Power(High Current)
Power(Low Current)
System Power Flow

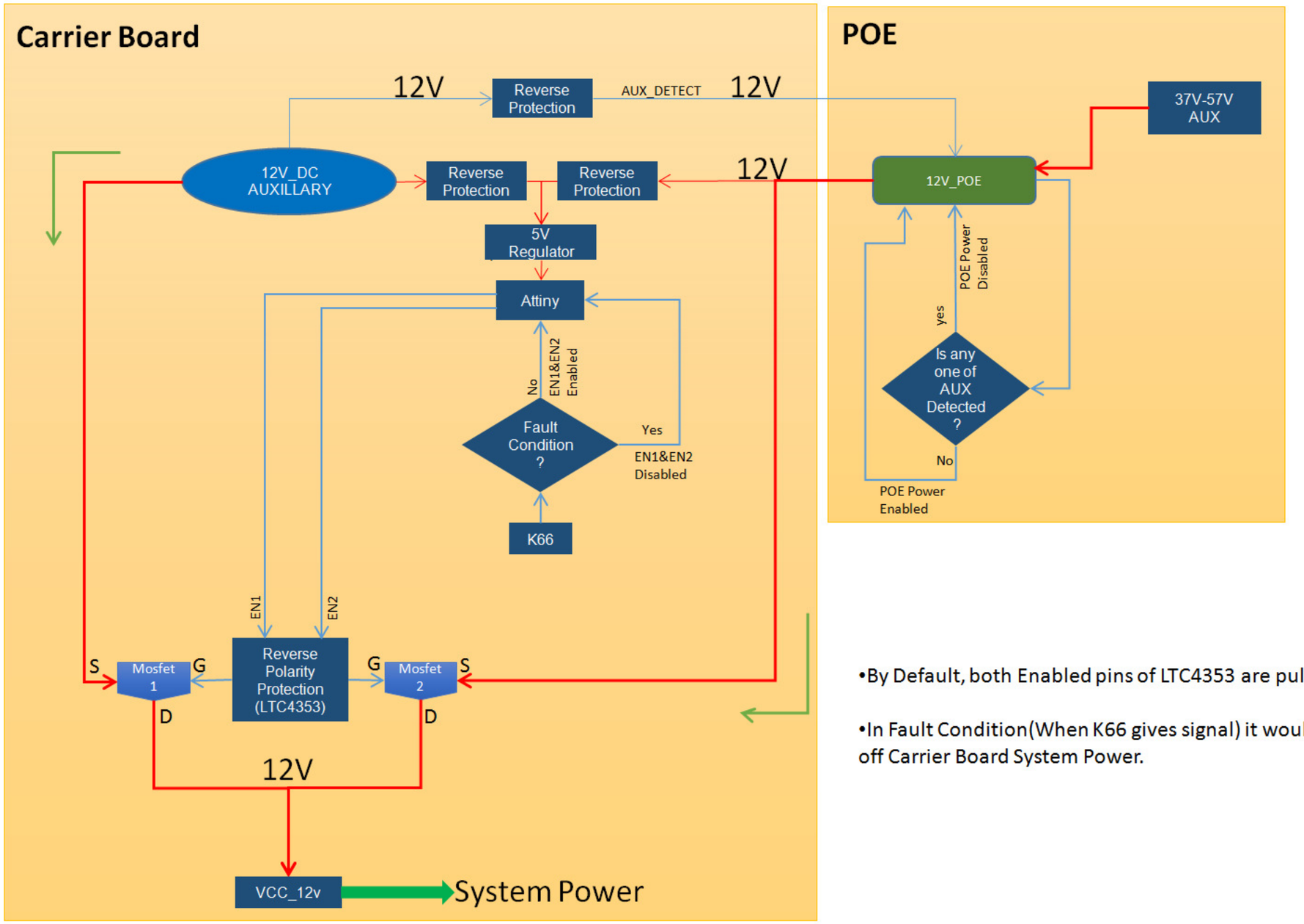

- By Default, both Enabled pins of LTC4353 are pulled low.
- In Fault Condition(When K66 gives signal) it would turn off Carrier Board System Power.

Entropic Manikin LLC, 670 Transfer Rd, St Paul, MN55114 USA	TITLE: **Block Diagram 2**		
	SIZE: C	DRAWING NO: **AMMDK-0A1**	REV: 2.1
	SCALE: NONE	RELEASE DATE: 21/08/2018	SHEET: 5 OF 24

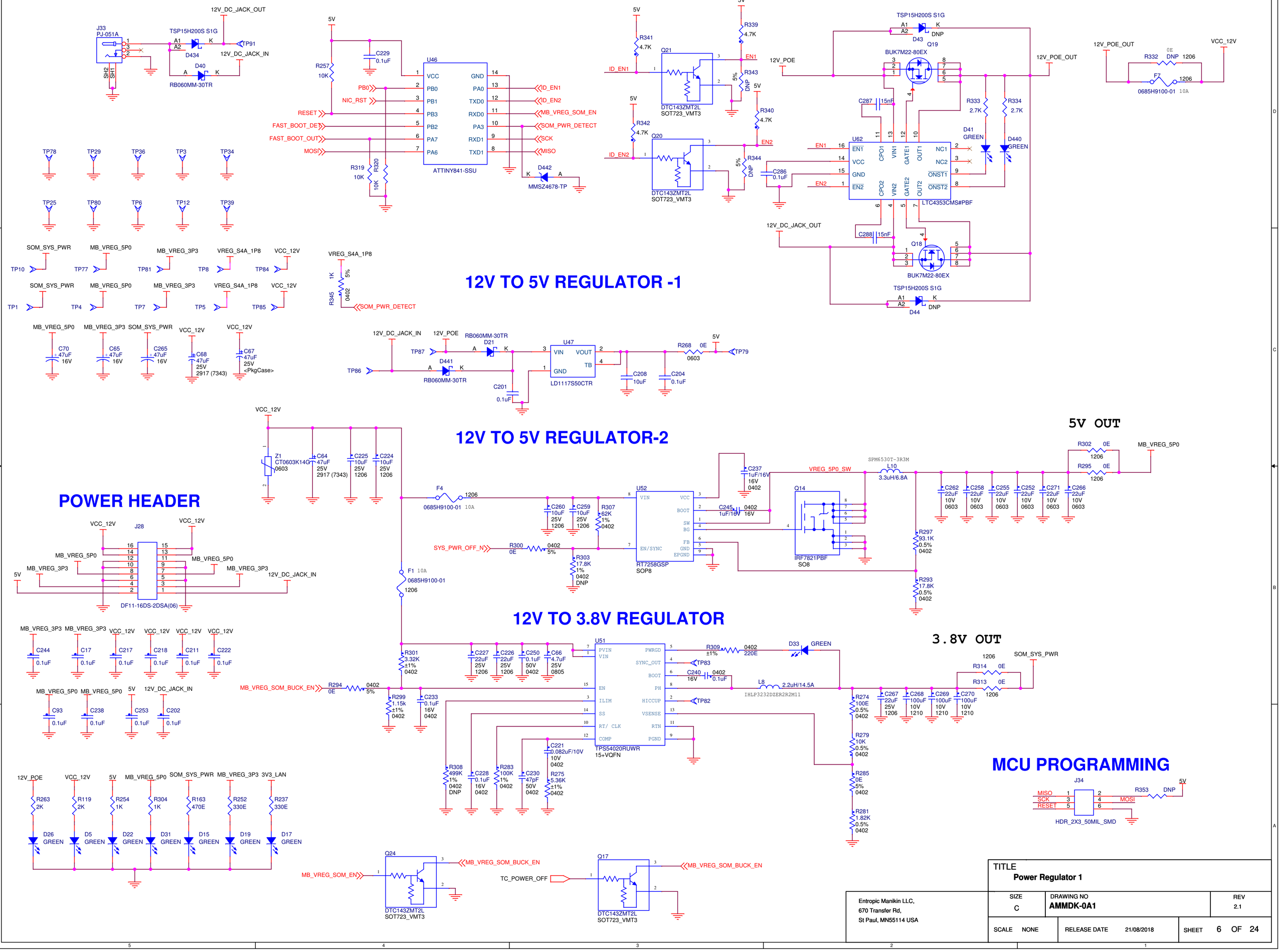
12V TO 5V REGULATOR -1
12V TO 5V REGULATOR-2
12V TO 3.8V REGULATOR
POWER HEADER
MCU PROGRAMMING
5V OUT
3.8V OUT
J33
PJ-051A
TSP15H200S S1G
D434
D40
RB060MM-30TR
12V_DC_JACK_OUT
12V_DC_JACK_IN
U46
ATTINY841-SSU
D442
MMSZ4678-TP
Q21
Q20
DTC143ZMT2L
SOT723_VMT3
TSP15H200S S1G
D43
D44
Q19
BUK7M22-80EX
Q18
U62
LTC4353CMS#PBF
D41
GREEN
D440
GREEN
12V_POE_OUT
VCC_12V
0685H9100-01
U47
LD1117S50CTR
RB060MM-30TR
Z1
CT0603K14G
F4
0685H9100-01
F1
0685H9100-01
U52
RT7258GSP
SOP8
Q14
IRF7821PBF
SO8
SPM6530T-3R3M
L10
3.3UH/6.8A
J28
DF11-16DS-2DSA(06)
U51
TPS54020RUWR
15+VQFN
D33
GREEN
L8
2.2uH/14.5A
IHLP3232DZER2R2M11
J34
HDR_2X3_50MIL_SMD
Q24
DTC143ZMT2L
SOT723_VMT3
Q17
DTC143ZMT2L
SOT723_VMT3
MB_VREG_SOM_BUCK_EN
TC_POWER_OFF
SYS_PWR_OFF_N
MB_VREG_SOM_EN
SOM_PWR_DETECT
VREG_5P0_SW
TITLE
Power Regulator 1
Entropic Manikin LLC,
670 Transfer Rd,
St Paul, MN55114 USA
SIZE
C
DRAWING NO
AMMDK-0A1
REV
2.1
SCALE NONE
RELEASE DATE 21/08/2018
SHEET 6 OF 24

12V TO 3V3 REGULATOR

3.3V OUT

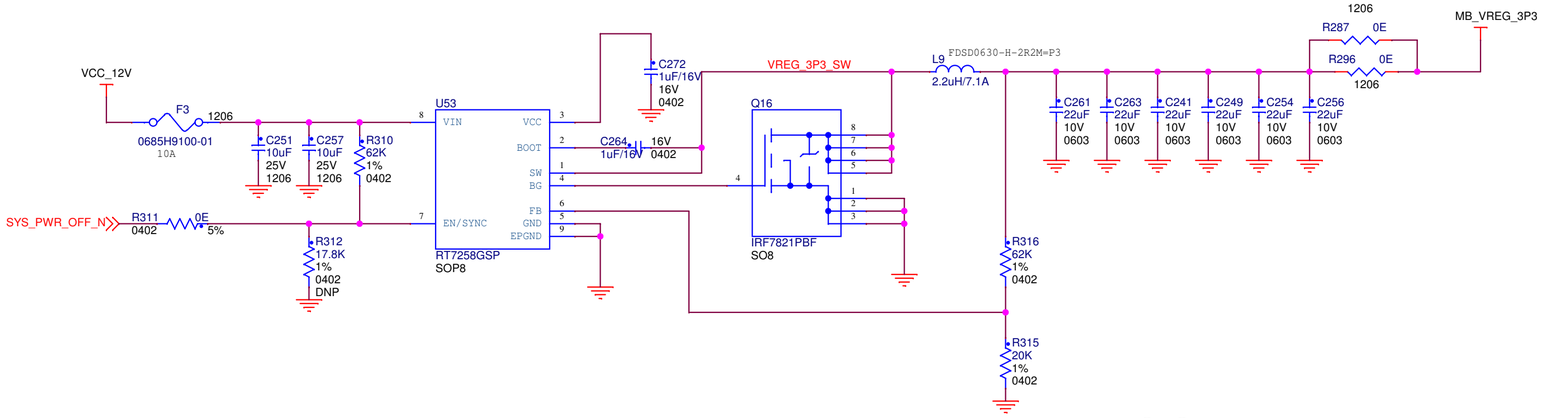

3.3V LAN OUT

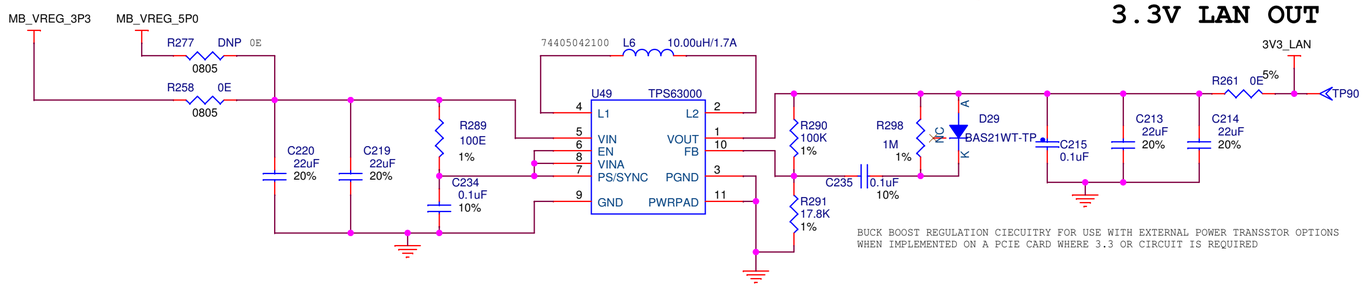

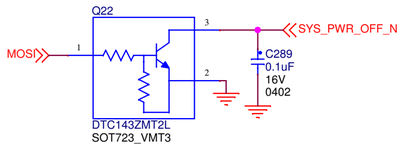

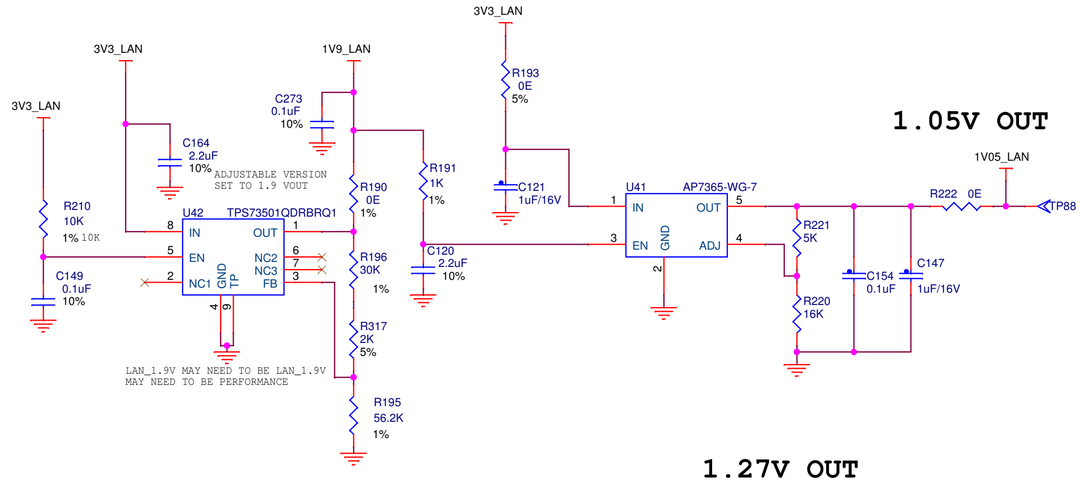

1.05V OUT

1.27V OUT

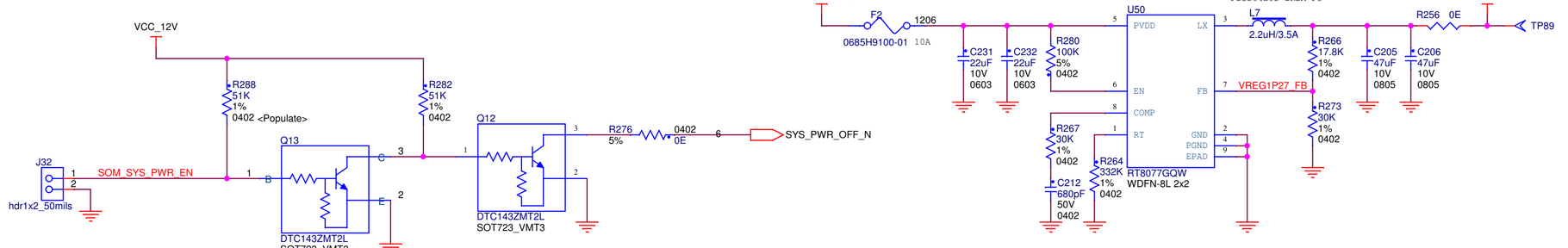

TITLE: **Power Regulator 2**			
Entropic Manikin LLC, 670 Transfer Rd, St Paul, MN55114 USA	SIZE: C	DRAWING NO: **AMMDK-0A1**	REV: 2.1
	SCALE: NONE	RELEASE DATE: 21/08/2018	SHEET: 7 OF 24

SOM CONNECTOR 1

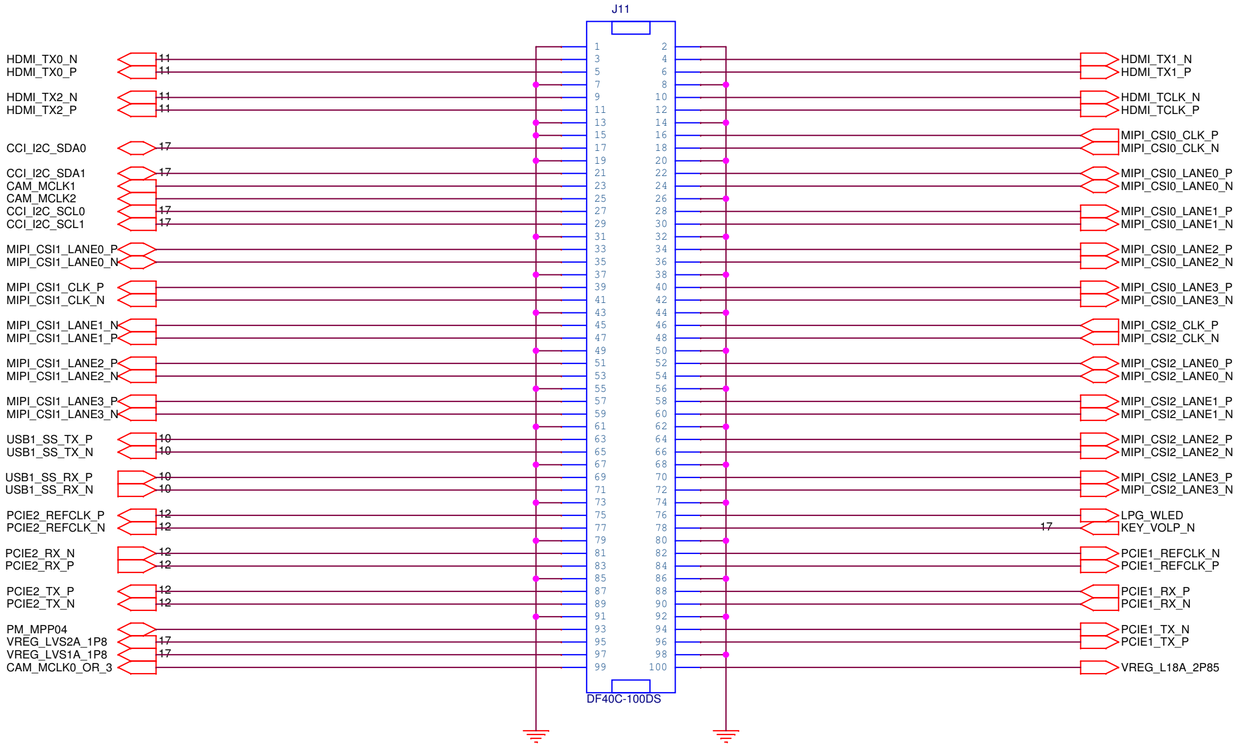

SOM CONNECTOR 2

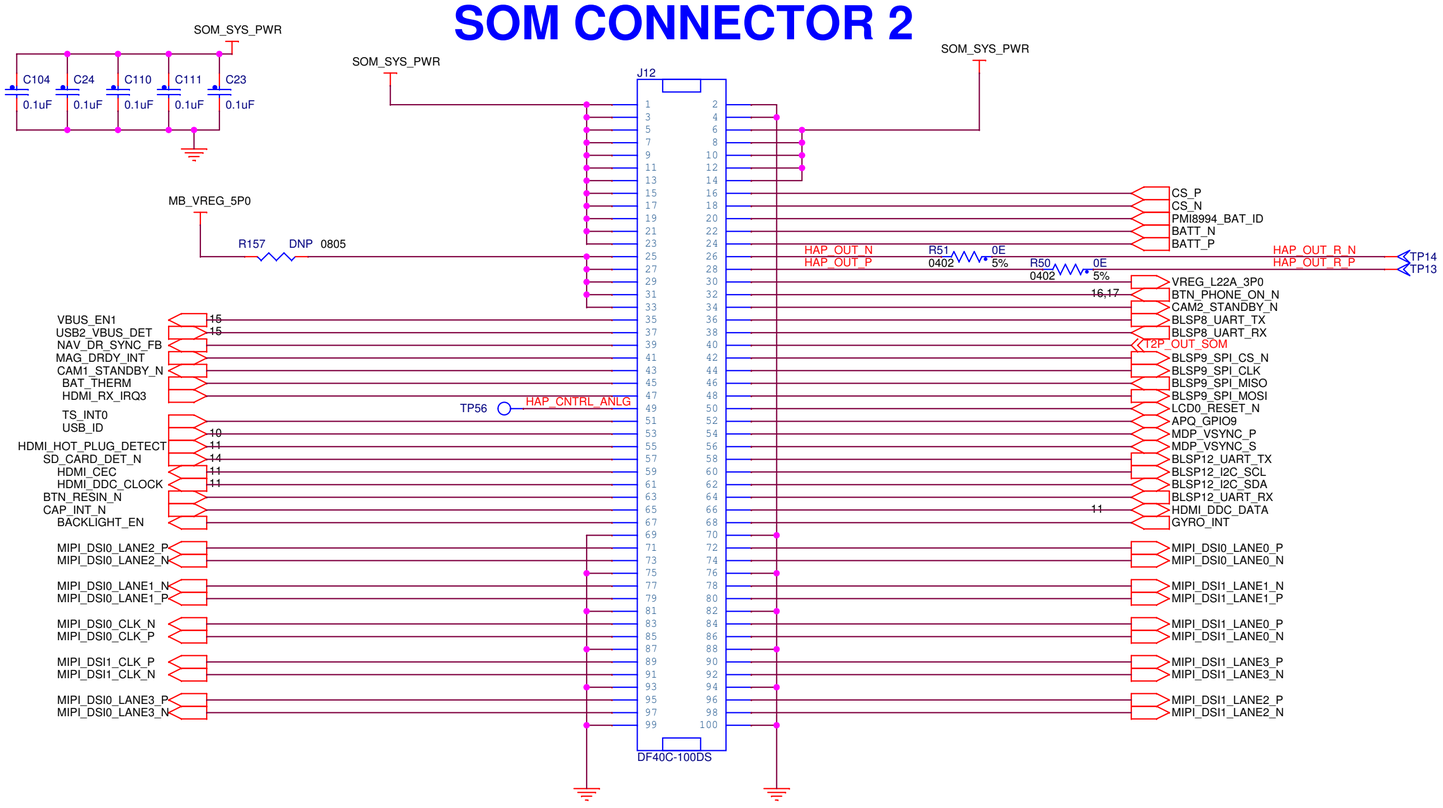

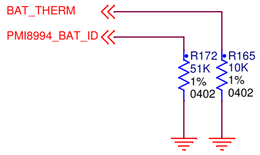

TITLE: **SOM B2B-1**			
Entropic Manikin LLC, 670 Transfer Rd, St Paul, MN55114 USA	SIZE: C	DRAWING NO: **AMMDK-0A1**	REV: 2.1
	SCALE: NONE	RELEASE DATE: 21/08/2018	SHEET: 8 OF 24

SOM CONNECTOR 3

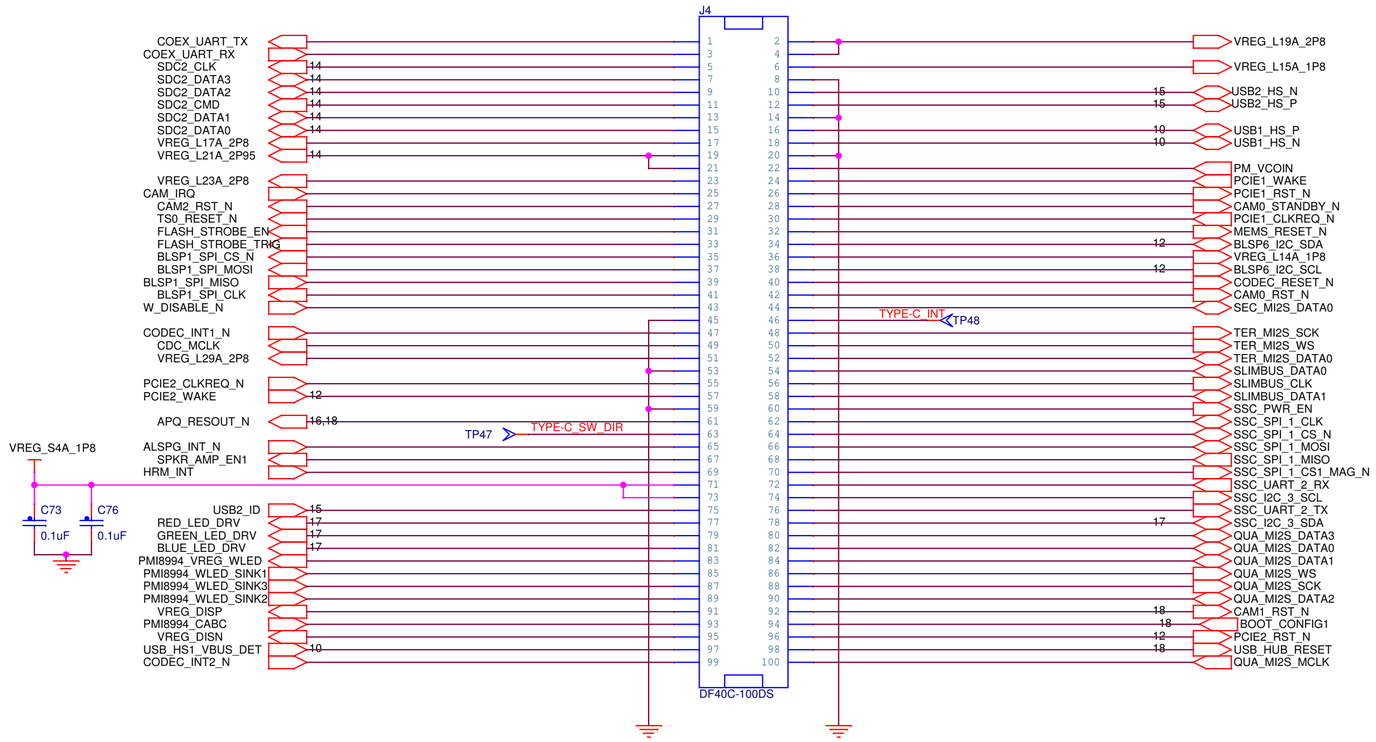

TITLE: **SOM B2B-2**			
Entropic Manikin LLC, 670 Transfer Rd, St Paul, MN55114 USA	SIZE: C	DRAWING NO: **AMMDK-0A1**	REV: 2.1
	SCALE: NONE	RELEASE DATE: 21/08/2018	SHEET 9 OF 24

USB HUB 3.0

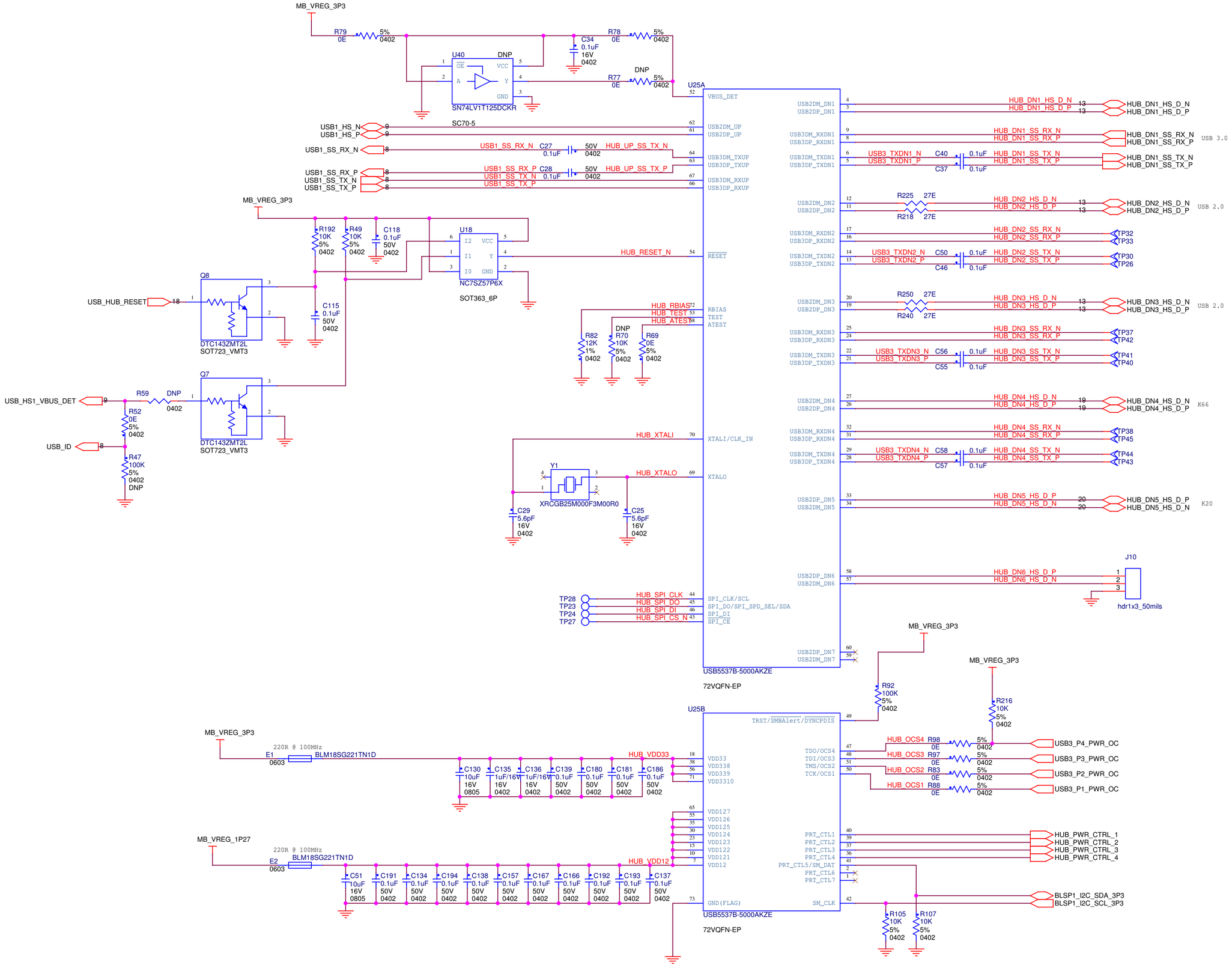

TITLE: **USB HUB 3.0**			
Entropic Manikin LLC, 670 Transfer Rd, St Paul, MN55114 USA	SIZE: C	DRAWING NO: **AMMDK-0A1**	REV: 2.1
	SCALE: NONE	RELEASE DATE: 21/08/2018	SHEET: 10 OF 24

HDMI

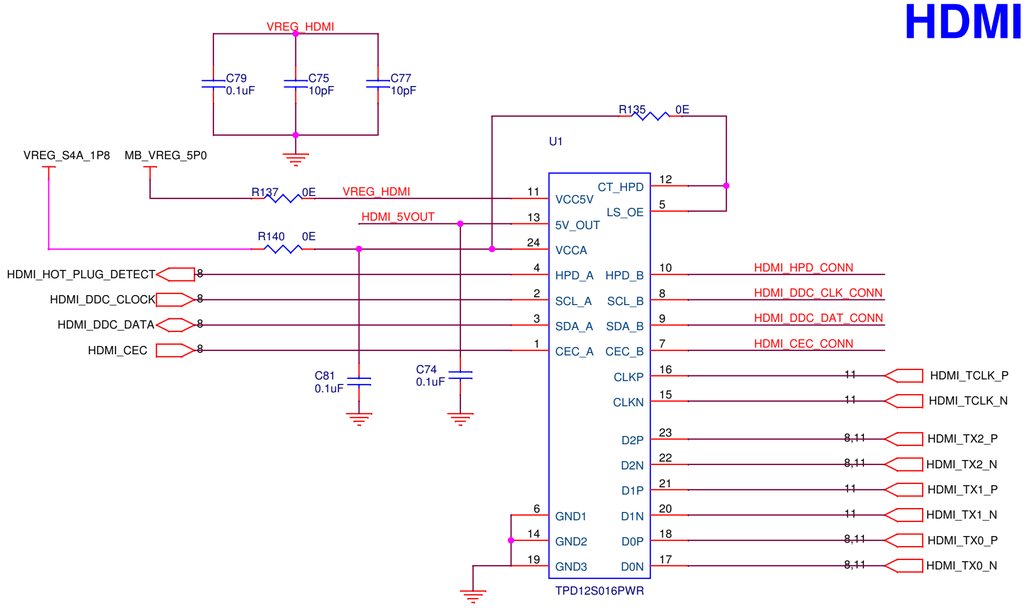

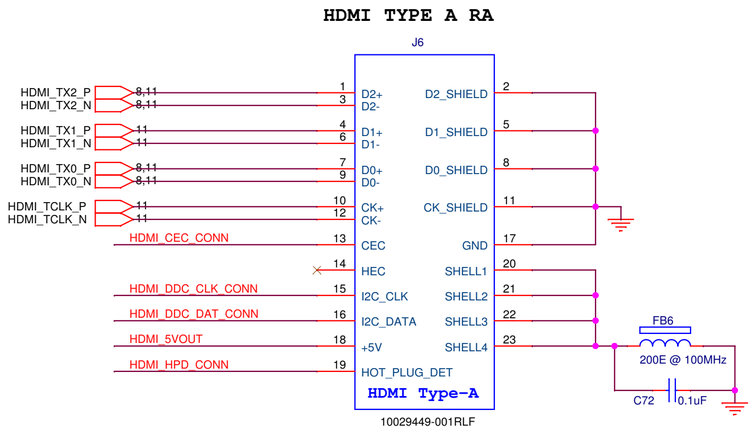

Entropic Manikin LLC, 670 Transfer Rd, St Paul, MN55114 USA	TITLE **HDMI**		
	SIZE C	DRAWING NO **AMMDK-0A1**	REV 2.1
	SCALE NONE	RELEASE DATE 21/08/2018	SHEET 11 OF 24

82754I LAN CONTROLLER

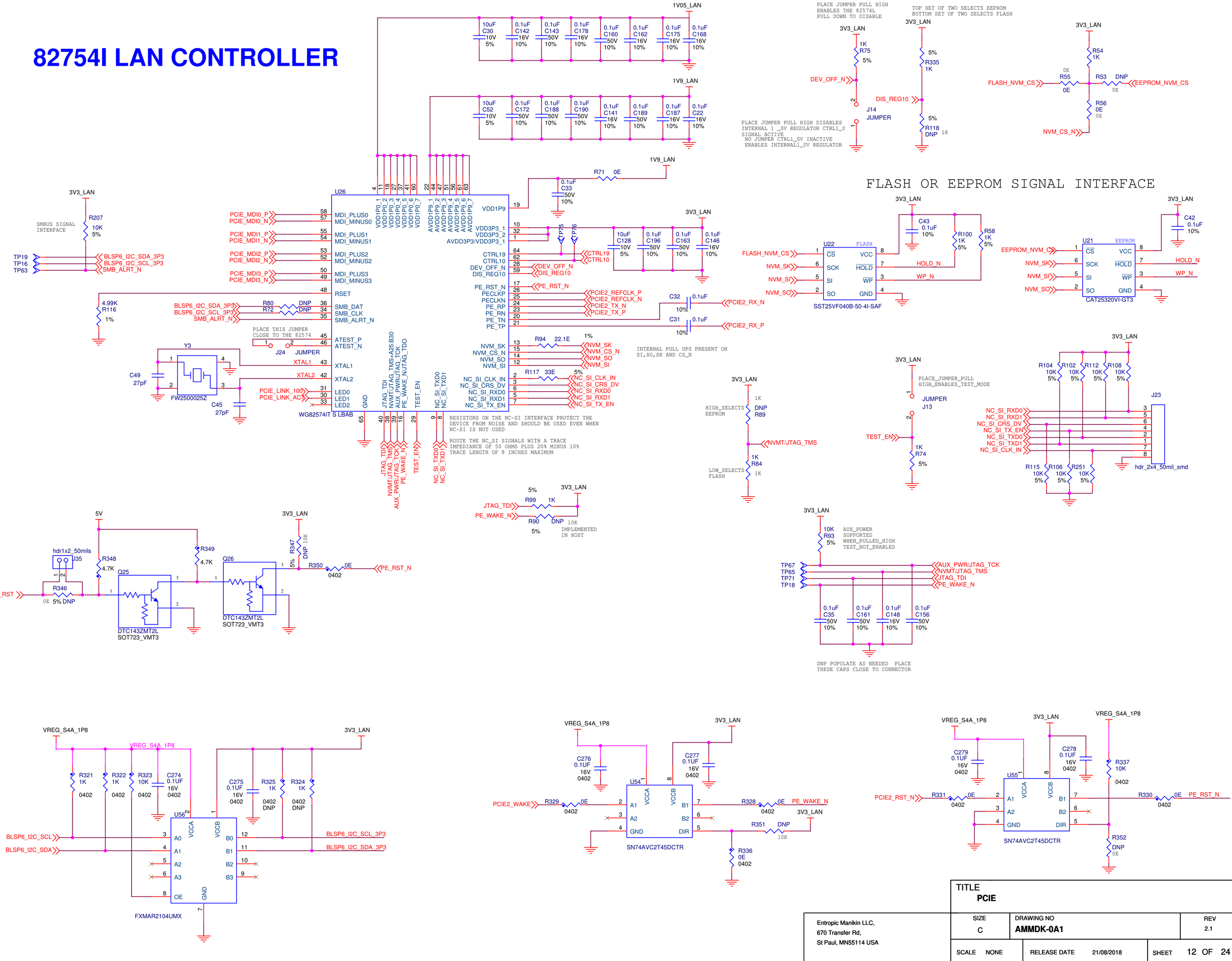

TITLE
PCIE

Entropic Manikin LLC, 670 Transfer Rd, St Paul, MN55114 USA	SIZE C	DRAWING NO **AMMDK-0A1**
		REV 2.1
	SCALE NONE	RELEASE DATE 21/08/2018
		SHEET 12 OF 24

USB SS

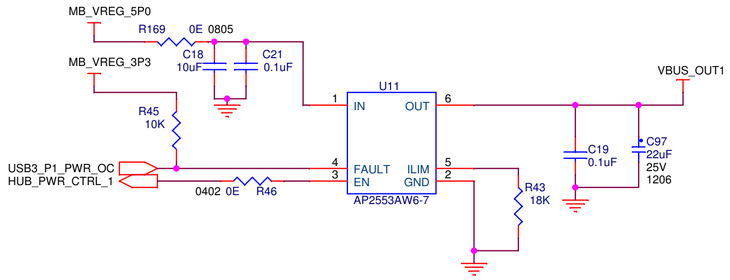

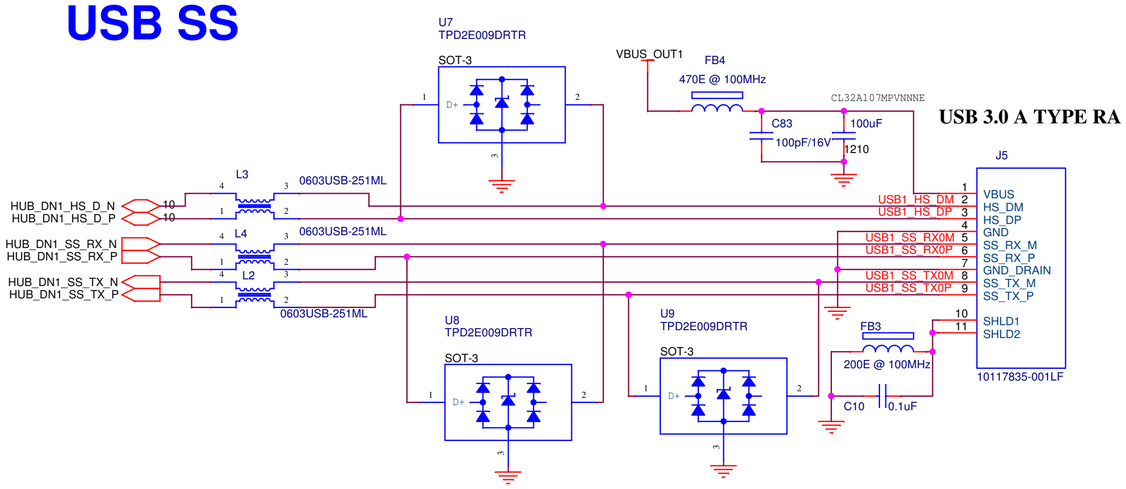

USB HS

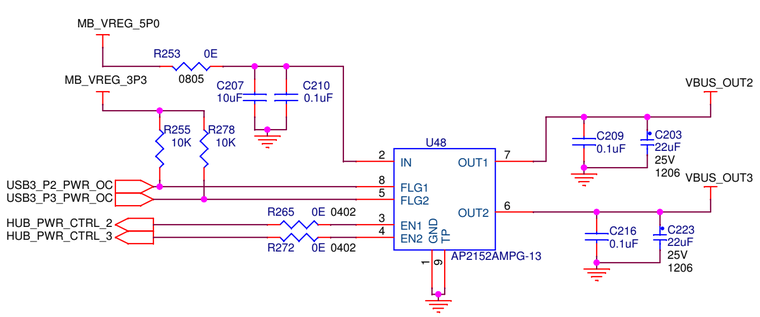

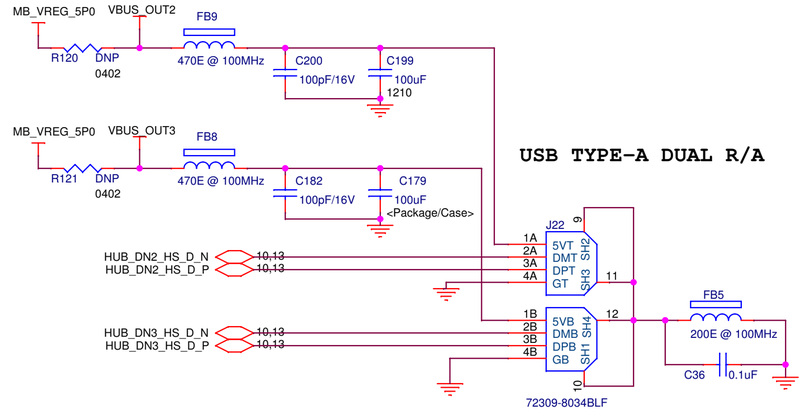

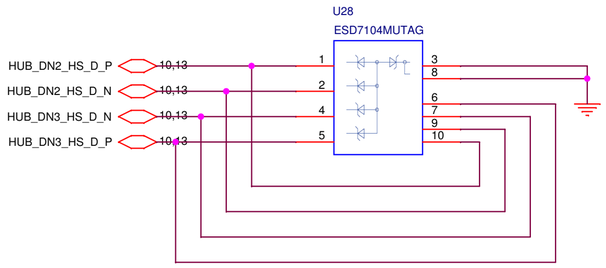

TITLE
USB SS and HS

Entropic Manikin LLC, 670 Transfer Rd, St Paul, MN55114 USA	SIZE C	DRAWING NO **AMMDK-0A1**
	REV 2.1	
	SCALE NONE	RELEASE DATE 21/08/2018
	SHEET 13 OF 24	

Micro SD CARD

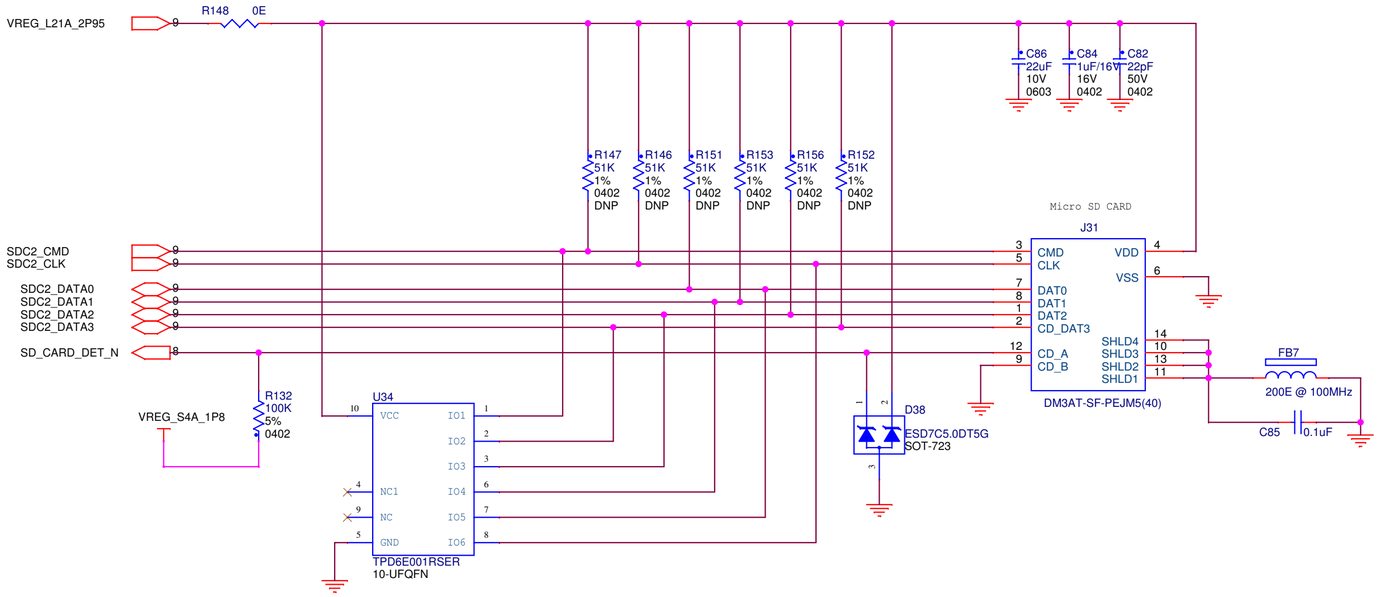

TITLE: **Micro Sd Card**			
Entropic Manikin LLC, 670 Transfer Rd, St Paul, MN55114 USA	SIZE: C	DRAWING NO: **AMMDK-0A1**	REV: 2.1
	SCALE: NONE	RELEASE DATE: 21/08/2018	SHEET: 14 OF 24

DEBUG SERIAL

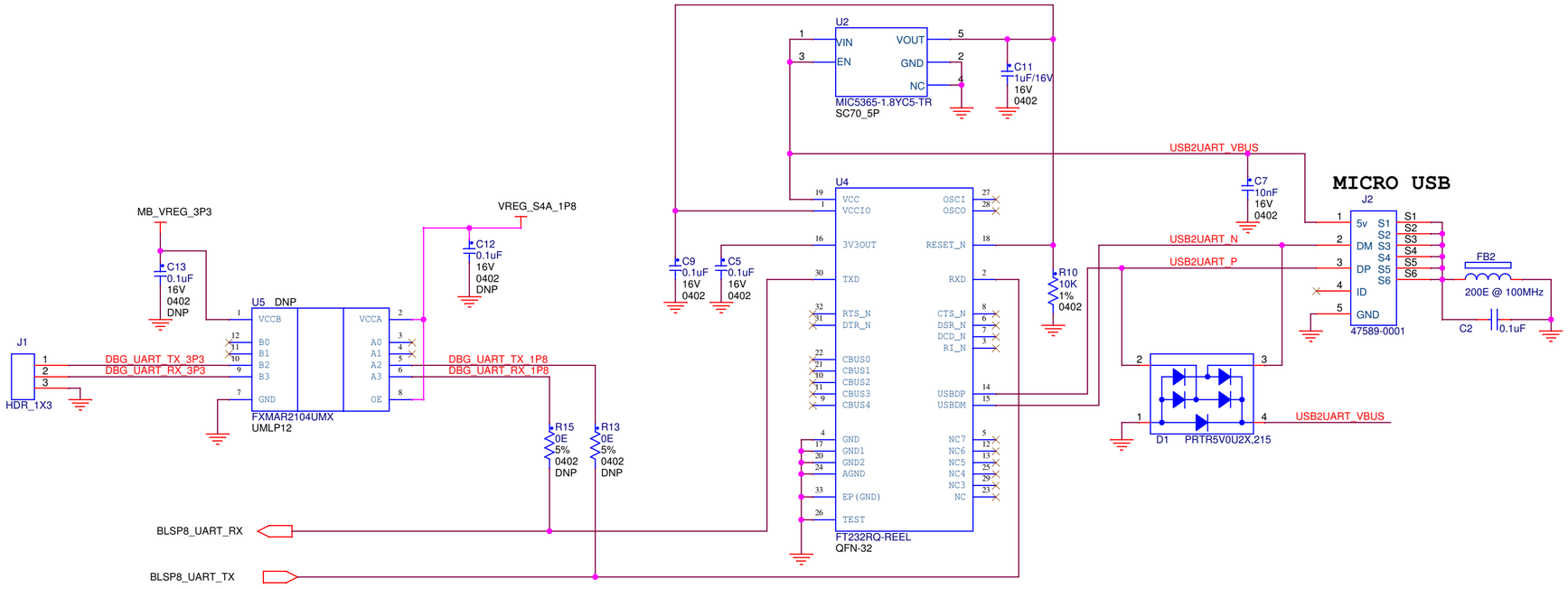

USB FAST BOOT

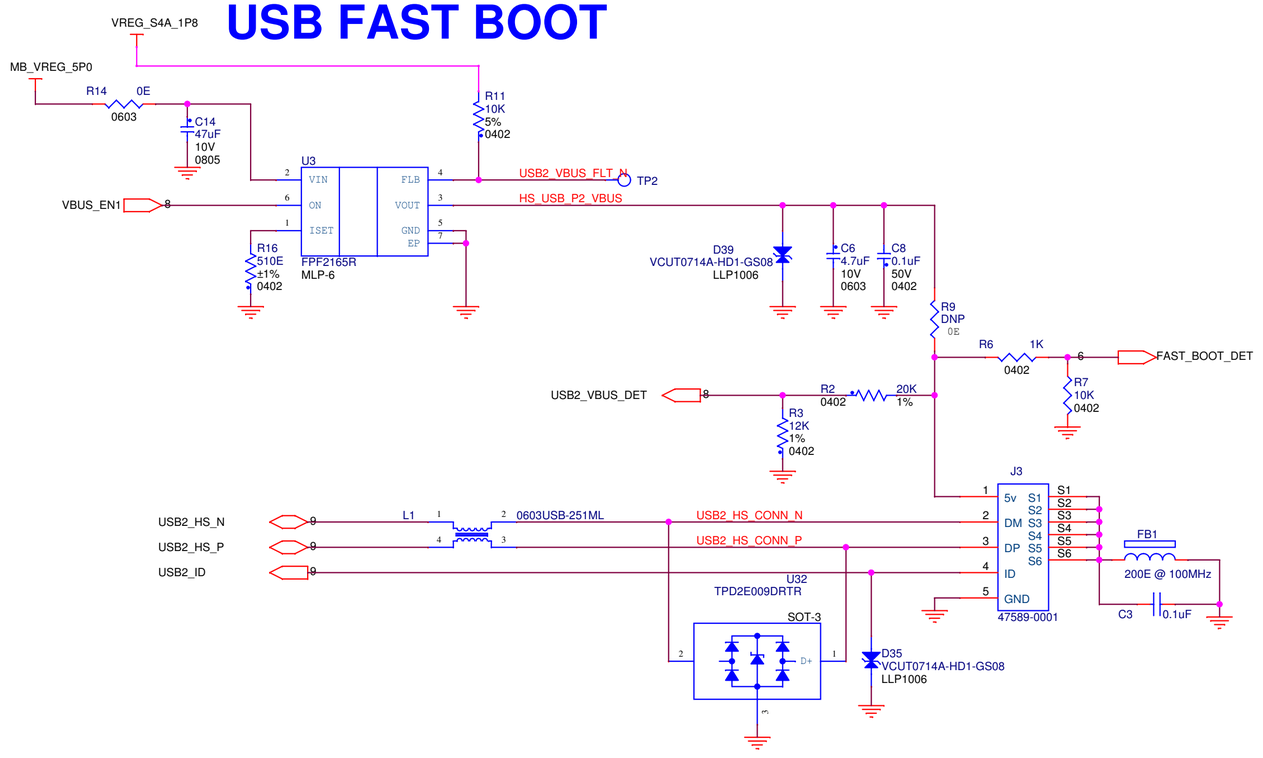

TITLE
Debug Serial and Fast Boot

Entropic Manikin LLC,
670 Transfer Rd,
St Paul, MN55114 USA

SIZE	DRAWING NO	REV
C	**AMMDK-0A1**	2.1

SCALE	NONE	RELEASE DATE	21/08/2018	SHEET	15 OF 24

AUTOMATION CONN

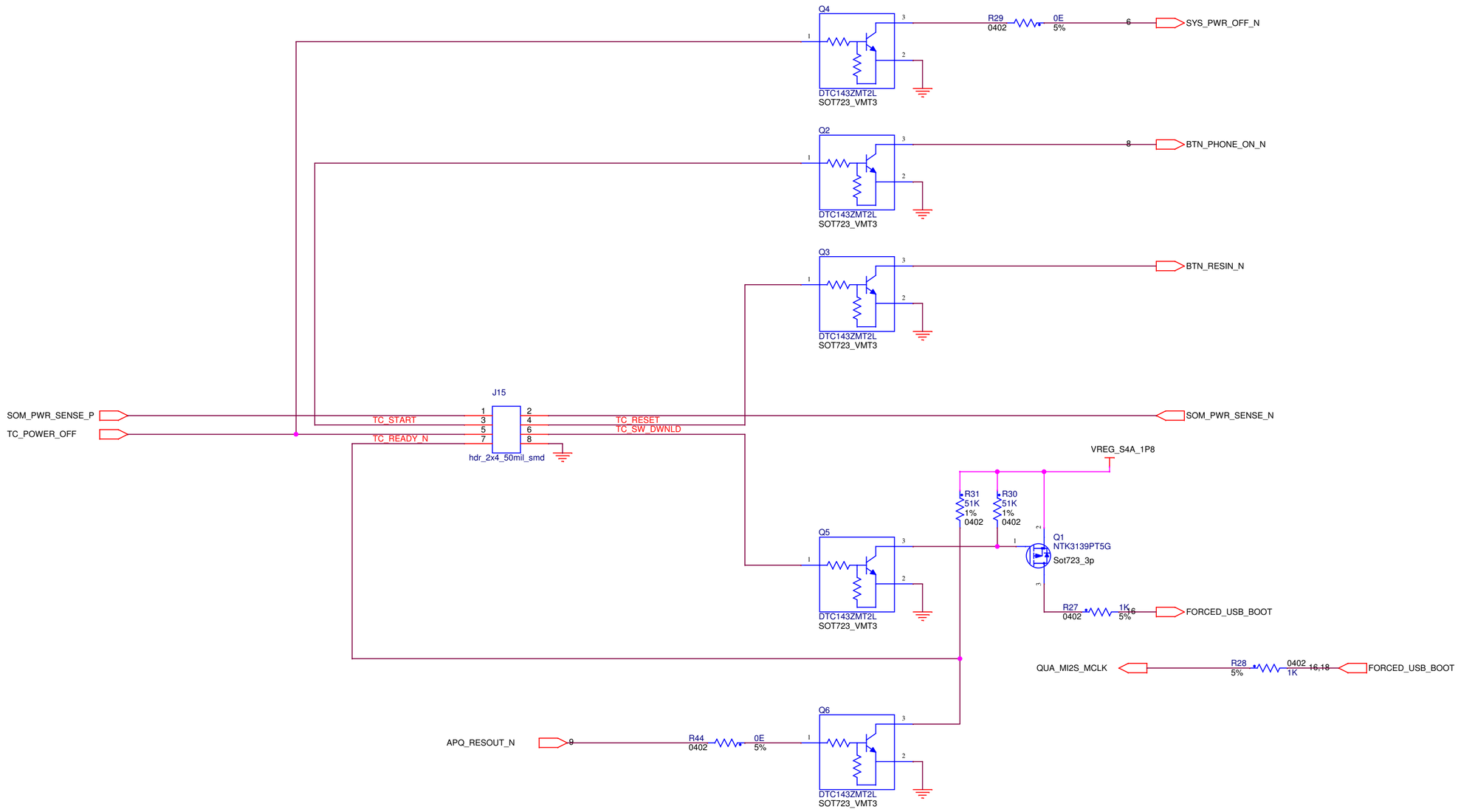

Entropic Manikin LLC, 670 Transfer Rd, St Paul, MN55114 USA	TITLE: **Automation Connector**		
	SIZE: C	DRAWING NO: **AMMDK-0A1**	REV: 2.1
	SCALE: NONE	RELEASE DATE: 21/08/2018	SHEET: 16 OF 24

LEDS AND SWITCHES

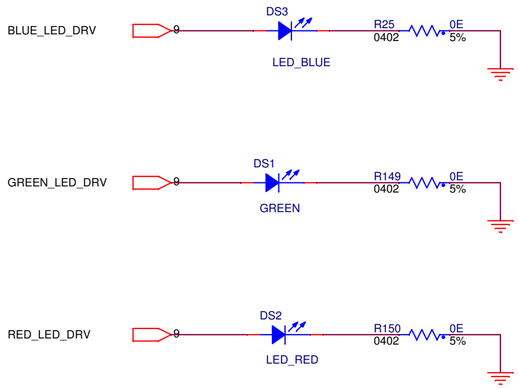

TACTILE SWITCH DUAL RA

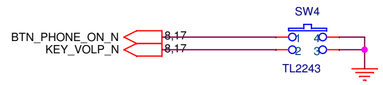

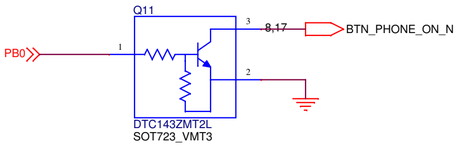

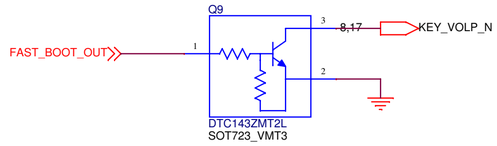

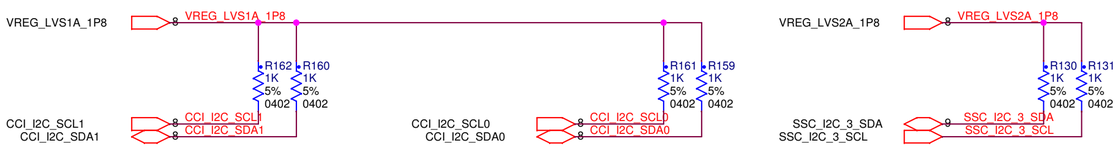

COIN CELL

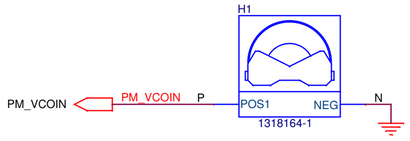

Entropic Manikin LLC, 670 Transfer Rd, St Paul, MN55114 USA	TITLE: **LEDs and Switches**		
	SIZE: C	DRAWING NO: **AMMDK-0A1**	REV: 2.1
	SCALE: NONE	RELEASE DATE: 21/08/2018	SHEET: 17 OF 24

SOM BOOT CONFIG

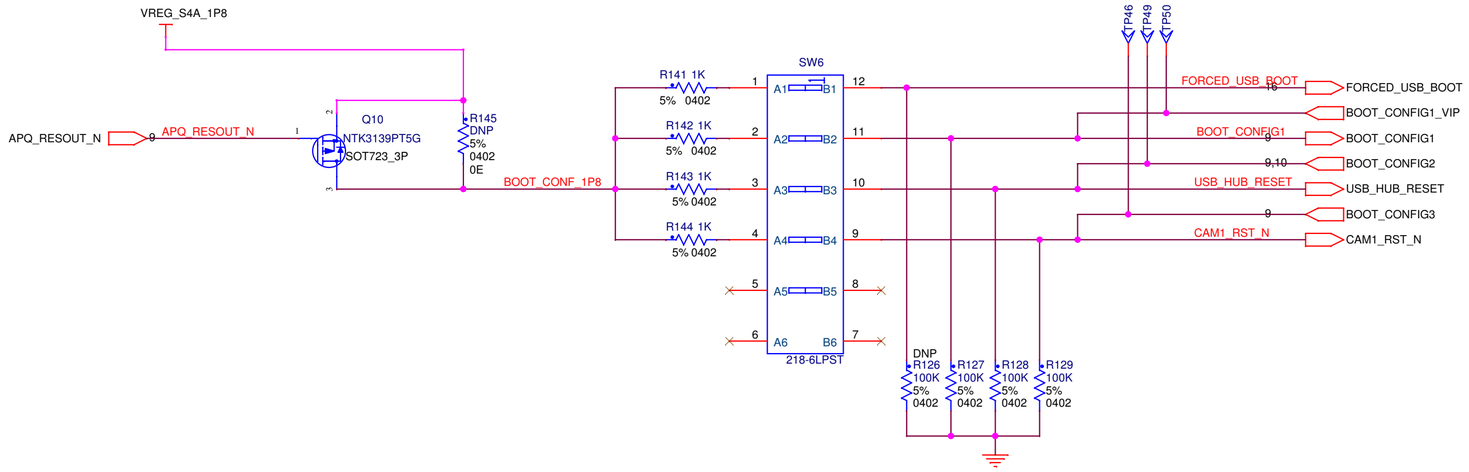

Entropic Manikin LLC,
670 Transfer Rd,
St Paul, MN55114 USA

TITLE
Som Boot Conifguration

SIZE	DRAWING NO	REV
C	**AMMDK-0A1**	2.1

SCALE	NONE	RELEASE DATE	21/08/2018	SHEET	18 OF 24

SWD CONNECTOR

K66F

J25
hdr_2x5_50mil_smd
TRACE_SWO
RST_TGTMCU_B
K66_JTAG_TDO
R242 0E
<Function>
PTA3
PTA0

U19
MK66FN2M0VLQ18

Layout Note:Connect C37 directly between VDDA and VSSA pins

LEVEL TRANSLATOR
U36
FXMAR2104UMX
UMLP12
BLSP1_SPI_CS_N
BLSP1_SPI_MOSI
BLSP1_SPI_MISO
BLSP1_SPI_CLK

LEVEL TRANSLATOR
U6
LSF0102DCUR
VSSOP8

JTAG HEADER
J26
hdr_2x5_50mil_smd

LEVEL TRANSLATOR
U15
LSF0102DCUR
VSSOP8

CAN TRANSCEIVER
U37
MCP2551ESN
ACM2012E-670-2P-T01
PESD2IVN-UX
PLACE NEAR TO CONNECTOR

INTERRUPTS
PTS810 SJK 250 SMTR LFS
PTS810 SJK 250 SMTR LFS
SW1
SW2

Y4
ABM3B-12.000MHZ-B2-T
Y5
ABS07-32.768KHZ-T

TITLE	K66F
SIZE	C
DRAWING NO	AMMDK-0A1
REV	2.1
SCALE	NONE
RELEASE DATE	21/08/2018
SHEET	19 OF 24

Entropic Manikin LLC,
670 Transfer Rd,
St Paul, MN55114 USA

OpenSDA Interface

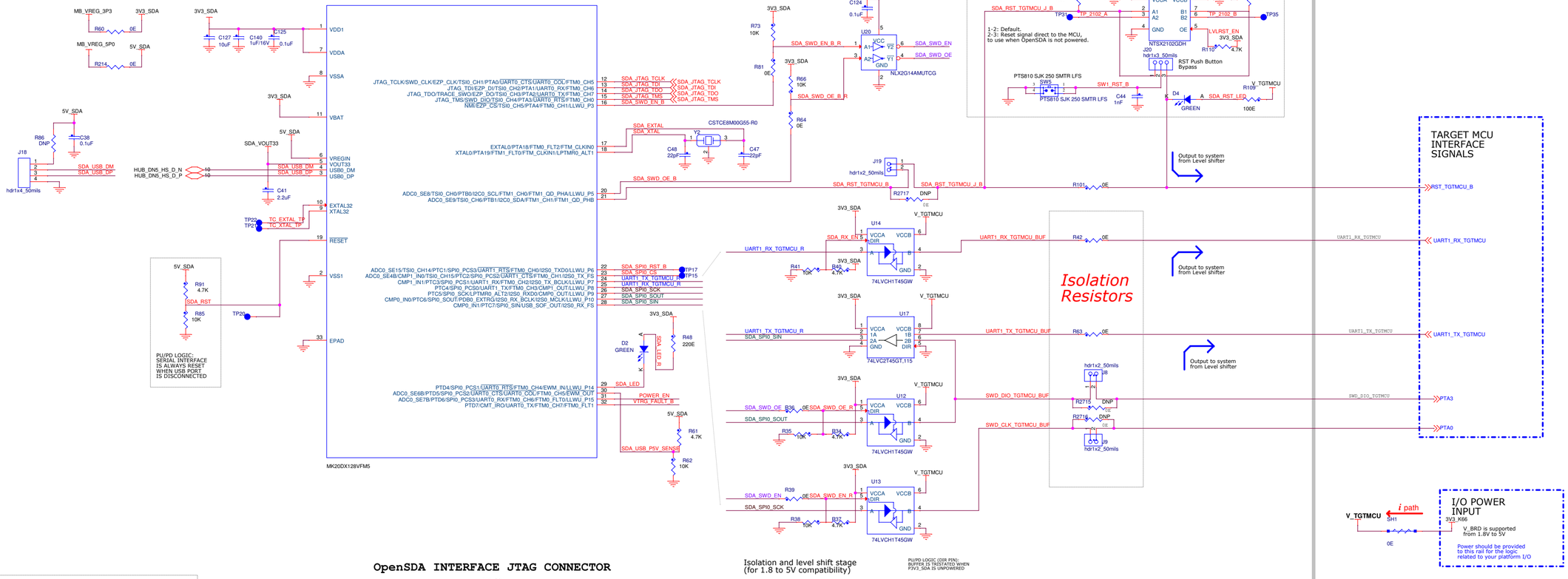

OpenSDA INTERFACE JTAG CONNECTOR

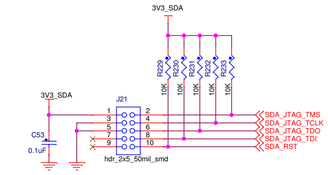

Isolation and level shift stage
(for 1.8 to 5V compatibility)

PU/PD LOGIC (DDR PIN):
BUFFER IS TRISTATED WHEN
P3V3_SDA IS UNPOWERED

{For enablement purposes only}

TITLE: Open SDA Interface			
Entropic Manikin LLC, 670 Transfer Rd, St Paul, MN55114 USA	SIZE: D	DRAWING NO: AMMDK-0A1	REV: 2.1
	SCALE: NONE	RELEASE DATE: 21/08/2018	SHEET: 20 OF 24

GPIO CONNECTOR

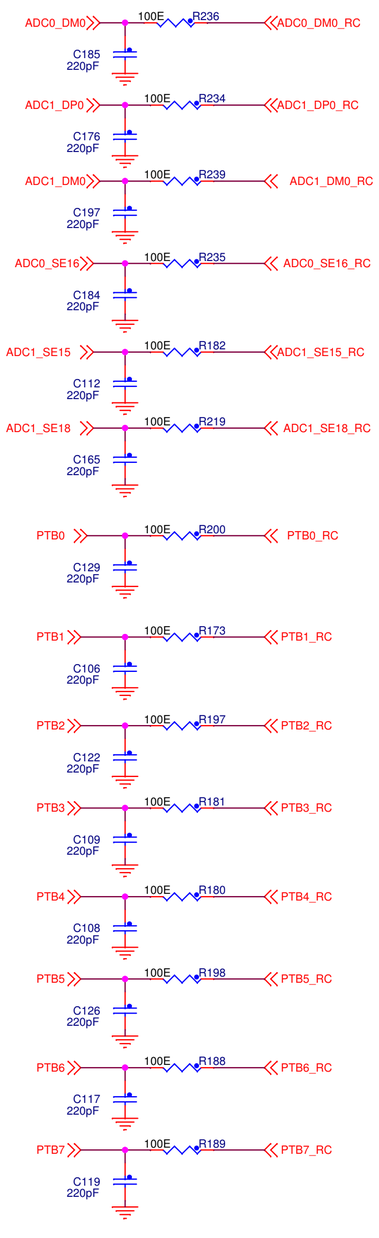

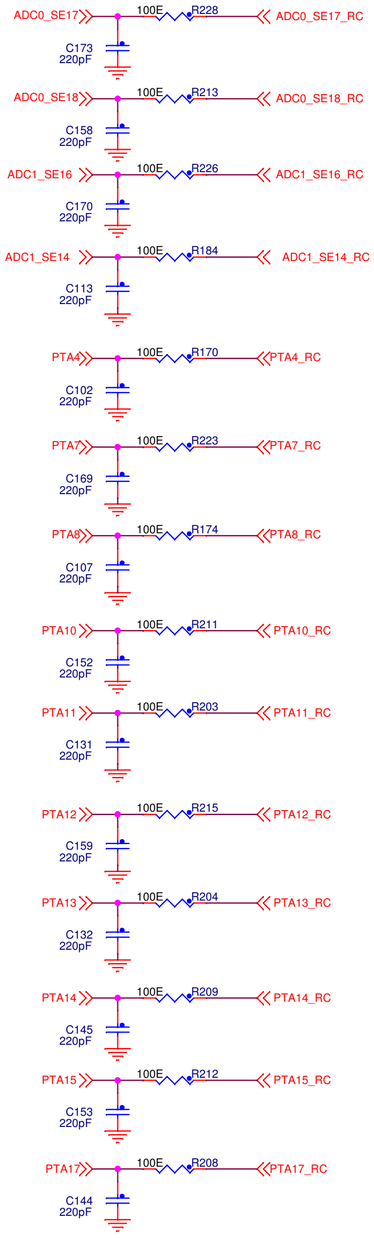

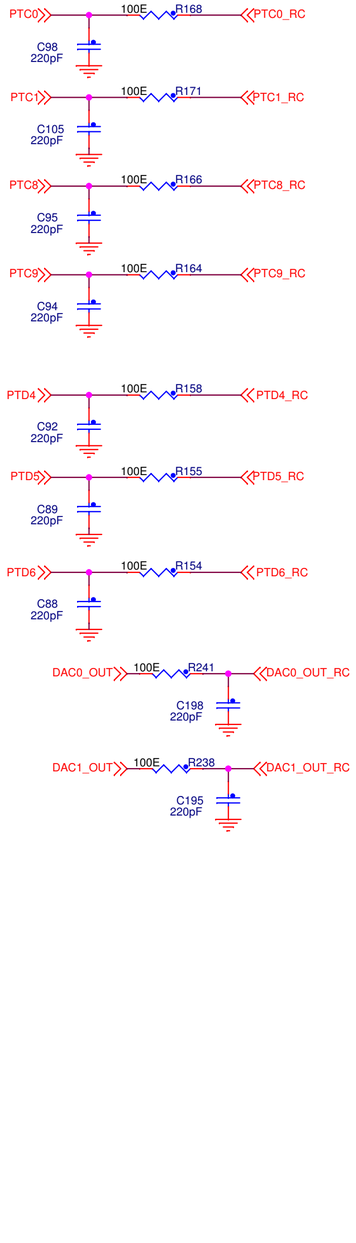

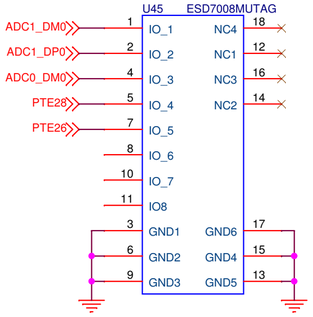

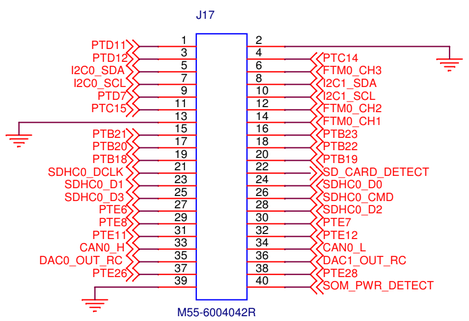

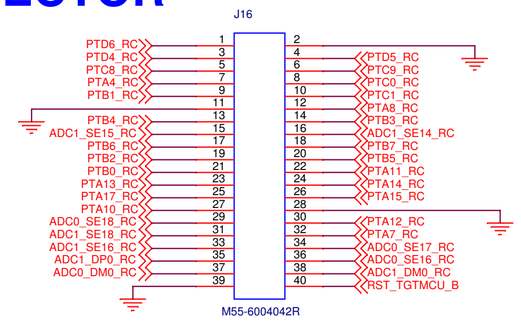

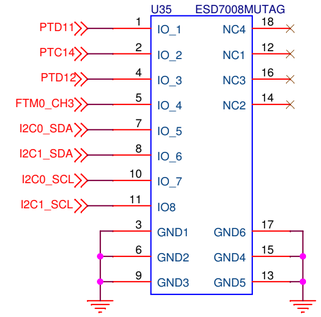

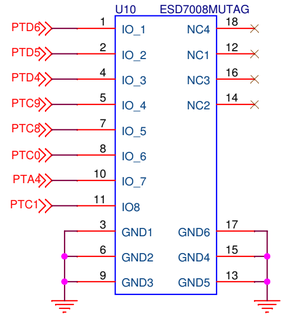

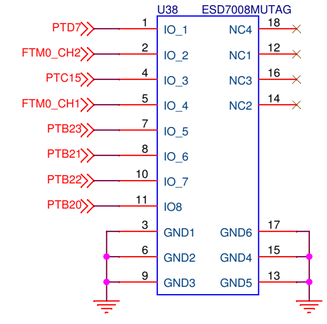

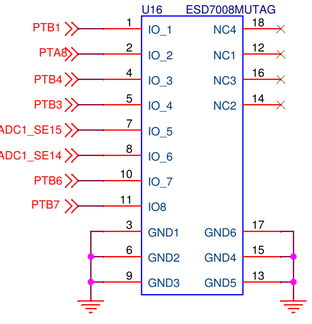

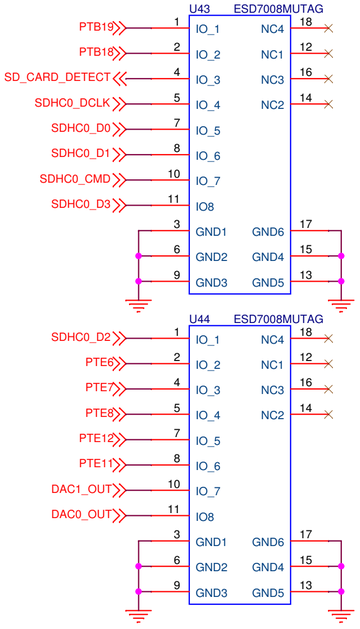

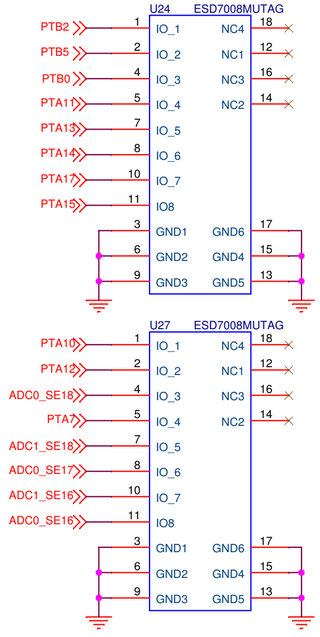

TITLE
GPIOS

Entropic Manikin LLC,
670 Transfer Rd,
St Paul, MN55114 USA

SIZE	DRAWING NO	REV
C	**AMMDK-0A1**	2.1

SCALE	RELEASE DATE	SHEET
NONE	21/08/2018	21 OF 24

PHY INTERFACE

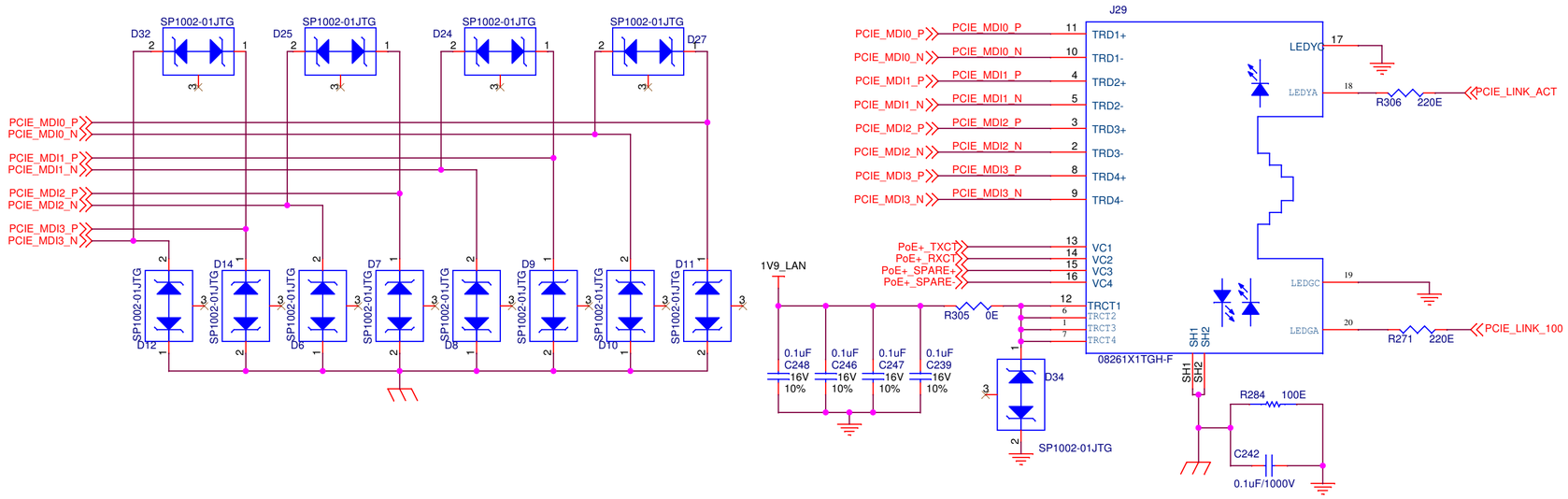

POE MODULE

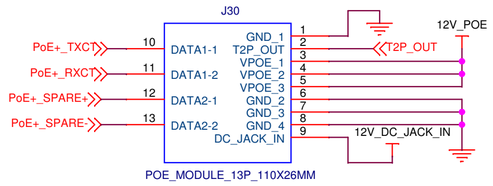

LOGIC INVERTER

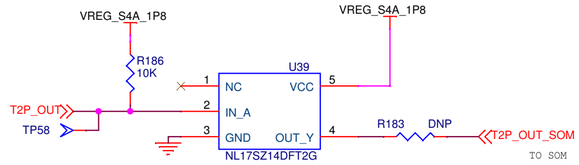

TITLE: **ETHERNET**			
Entropic Manikin LLC, 670 Transfer Rd, St Paul, MN55114 USA	SIZE: C	DRAWING NO: **AMMDK-0A1**	REV: 2.1
	SCALE: NONE	RELEASE DATE: 21/08/2018	SHEET: 22 OF 24

REVISION HISTORY

REV NO	DESCRIPTION	DATE	DONE BY
1.0	INITIAL RELEASE	24/MAR/2018	
2.0	UPDATED REVERSE POLARITY WITH IDEAL DIODE FOR DUAL SUPPLY.ADDED UNI-DIRECTIONAL LEVEL TRANSLATOR IN NIC. UPDATED CONNECTOR J30 FOR POE. DISABLED INTERNAL 1V05 REGULATOR IN NIC. UPDATED SYSTEM POWER SHUTDOWN USING CONTROL FROM K66 FOR OVER CURRENT.	18/AUG/2018	

THIS PAGE IS INTENTIONALLY LEFT BLANK

Entropic Manikin LLC, 670 Transfer Rd, St Paul, MN55114 USA	TITLE **Blank Page**		
	SIZE C	DRAWING NO **AMMDK-0A1**	REV 2.1
	SCALE NONE	RELEASE DATE 21/08/2018	SHEET 24 OF 24